A Standardized Protocol for Drift-fence Surveys

Technical Report No. 14

Kevin M. Enge

February 1997

Florida Game and Fresh Water Fish Commission
620 South Meridian Street
Tallahassee, Florida 32399-1600

A Standardized Protocol for Drift-fence Surveys

Technical Report No. 14

Kevin M. Enge

Florida Game and Fresh Water Fish Commission
Route 7, Box 3055, Quincy, Florida 32351

February 1997

Suggested citation:

Enge, K. M. 1997. A standardized protocol for drift-fence surveys. Florida Game and Fresh Water Fish Comm. Tech. Rep. No. 14. Tallahassee. 69 pp + vi.

ABSTRACT

This report provides a standardized protocol for herpetofaunal surveys using drift fences, including recommended sampling periods and schedules, drift-fence material, and array design. Methodology is given for installing fences; constructing funnel traps; checking traps; processing specimens; inventorying habitat; and recording, entering, managing, and analyzing data. Sample forms are provided for recording capture and habitat data. Species codes and a numbering system for marking amphibians and reptiles are also included. For comparative purposes, capture data from most major drift-fence surveys in Florida are summarized by habitat, and standardized capture rates are calculated.

Drift-fence herpetofaunal surveys should be conducted for ≥1 year, and if continuous sampling is not feasible, trapping should be conducted for periods of ≥2 weeks during the most productive periods of the year (e.g., April, June, September/October). Traps should be checked at least twice per week, and trapped animals should be released ≥3 m away on the opposite side of the fence. At least 2 drift-fence arrays consisting of 3 or 4 fences each should be used to sample a habitat. Aluminum or galvanized valley and silt fencing are suitable drift-fence materials. Silt fencing is less expensive than metal valley and is easier to install in wetland habitats. Silt fencing is most suited for use in 3-fence arrays with funnel traps; most herpetofaunal species can be captured using funnel traps that are properly constructed and installed.

Areas of Florida that have been undersampled by drift-fence surveys are the Panhandle west of the Apalachicola River, the Atlantic Coast, the southwestern Gulf Coast, and south of Lake Okeechobee. Relatively little is known regarding the herpetofauna of most coastal habitats, dry prairie, forested wetlands, and rockland habitats. Drift-fence surveys could provide information on the impact of various land management practices and habitat restoration efforts on herpetofaunal communities.

ACKNOWLEDGMENTS

I would like to thank the researchers who provided unpublished drift-fence data for inclusion in appendices A–R. Florida Department of Environmental Protection personnel who contributed drift-fence data were Terry Hingtgen (Paynes Creek State Historic Site, Collier-Seminole and Fort Cooper state parks, and Delnor-Wiggins Pass and Oscar Scherer state recreation areas), Bert Charest (Guana River State Park), Mathew Wingate and Celeste Moore (Big Talbot Island and Ft. George Island state parks), Daniel Pearson (San Felasco Hammock State Preserve), and Karl Studenroth (Econfina River State Park, Eglin Air Force Base). Florida Game and Fresh Water Fish Commission personnel who contributed data were Kristin Wood (Chassahowitzka WMA and Chinsegut Nature Center), Stephen Stiegler (Jennings Forest WMA), Donald "Tim" Towles (Rotenberger WMA and Everglades Conservation Area), and Danon Moxley (Lake Istokpoga). Peter Southall and Douglas Runde collaborated in drift-fence surveys of Olustee Battlefield State Historic Site and Andrews, Big Shoals, Joe Budd, and Apalachicola WMAs. David Cobb, David Cook, Don Wood, and Kristin Wood reviewed earlier drafts of the report, and Cavell Kyser helped edit and format the report.

TABLE OF CONTENTS

ABSTRACT . . . iii

ACKNOWLEDGMENTS . . . iv

INTRODUCTION . . . 1

METHODS
- Sampling Period and Schedule . . . 2
- Drift-fence Material . . . 3
- Array Design . . . 3
- Fence Installation . . . 6
- Trap Construction . . . 8
- Trap Installation . . . 9
- Checking Traps . . . 11
- Processing Specimens and Recording Data . . . 13
- Data Entry and Management . . . 16
- Data Analysis . . . 16
- Habitat Inventory . . . 18

DISCUSSION
- Surveyed Areas or Habitats . . . 19
- Areas or Habitats Needing Surveys . . . 19

LITERATURE CITED . . . 23

APPENDICES
- Appendix A. Drift-fence data from flatwoods in the Panhandle . . . 28
- Appendix B. Drift-fence data from wet and mesic flatwoods in northern Florida . . . 30
- Appendix C. Drift-fence data from mesic and scrubby flatwoods in central Florida . . . 32
- Appendix D. Drift-fence data from flatwoods in southern Florida . . . 34
- Appendix E. Drift-fence data from sandhills in the Panhandle and northern Florida . . . 36
- Appendix F. Drift-fence data from sandhills in central and southern Florida . . . 38
- Appendix G. Drift-fence data from upland pine forests and sand pine plantations in the Panhandle and northern Florida . . . 40
- Appendix H. Drift-fence data from scrubs in northern and central Florida . . . 42
- Appendix I. Drift-fence data from scrubs in southern Florida . . . 44
- Appendix J. Drift-fence data from rosemary scrubs along the Lake Wales Ridge . . . 45
- Appendix K. Drift-fence data from xeric and rockland hammocks . . . 46
- Appendix L. Drift-fence data from mesic hardwood-dominated sites . . . 48
- Appendix M. Drift-fence data from hydric hammocks . . . 51
- Appendix N. Drift-fence data from forested wetland sites . . . 53
- Appendix O. Drift-fence data from cypress-dominated sites . . . 56
- Appendix P. Drift-fence data from depression and basin marsh sites . . . 58
- Appendix Q. Drift-fence data from marshes, wet and marl prairies, and tidal marshes and swamps . . . 60
- Appendix R. Drift-fence data from coastal habitats in peninsular Florida . . . 62
- Appendix S. Form for recording drift-fence capture data . . . 64
- Appendix T. Species codes and names of amphibians, reptiles, and mammals . . . 65
- Appendix U. Habitat preferences of amphibians and reptiles . . . 67
- Appendix V. Form for recording drift-fence habitat data . . . 68

INTRODUCTION

This report is intended to provide effective and efficient drift-fence methodology for herpetofaunal inventories of most habitats or areas, with the understanding that some species are difficult or impossible to detect using drift fences because of their size, behavior, or habitat use. Other methods (e.g., turtle trapping, road cruising [Klauber 1939], anuran auditory surveys, time-constrained searches [Campbell and Christman 1982*a*], and coverboards [Grant et al. 1992]) are often necessary to compile a more complete species list for an area. Drift-fence surveys have been conducted in Florida since 1976 using a variety of materials, trap types, array designs, and trapping schedules. Survey methodology should be standardized for comparative purposes and to maximize the utility of the data collected. The protocol recommended in this report may not be suitable for every habitat or site, but it represents the current state of the art in Florida. This methodology has evolved over the course of surveys employing a total of 252 drift-fence arrays.

Surveying the herpetofaunal community in an area or habitat is confounded by a number of variables, including species' habits and the effects of season and weather on activity patterns. The single most effective means of detecting small, surface-active amphibians and reptiles appears to be drift fencing (i.e., employing a barrier to divert moving animals into pitfall and/or funnel traps). Drift-fence surveys can be used to inventory the herpetofaunal community of a habitat or area, to study the effects of habitat management practices on herpetofaunal species or communities, to detect the presence of rare species prior to development or habitat alteration of a tract of land, and to provide important baseline data for future monitoring of the status of a particular species or of the herpetofaunal community.

The presence of some species is difficult to detect, especially during short-term sampling. Amphibians and reptiles are most likely to be detected during their breeding season or when young-of-the-year appear. During the breeding season, terrestrial amphibians may move long distances to wetlands, and reptiles (particularly males) often increase their activity and may move long distances in search of mates. Increased frequency and distance of movements result in a higher probability of encountering a drift fence. Other productive times for drift-fence captures are when amphibians metamorphose and leave their natal sites, and when neonate reptiles disperse. Year-round sampling may be necessary to detect amphibian species that breed at different times of the year.

The advantages of drift fences are that they 1) trap continuously, detecting both diurnal and nocturnal species; 2) are very effective at catching small, surface-active species; 3) can potentially detect most herpetofaunal species, including cryptic ones not susceptible to other survey techniques; 4) are effective across a wide variety of terrestrial and wetland habitats; 5) allow positive identification of captured animals, unlike auditory or visual surveys; 6) require relatively little time to check traps; 7) are composed of relatively durable materials, allowing long-term studies with minimal repairs; and 8) allow the establishment of permanent trapping stations (by marking or taking GPS coordinates) for monitoring surveys.

The disadvantages of drift fences are that they 1) require substantial time to install and construct funnel traps; 2) require expensive materials compared to most other survey methods; 3) can potentially result in high trapping mortality due to overheating, desiccation, drowning, and/or predation; 4) are relatively ineffective at catching large turtles, large snakes, and arboreal and fossorial species (Campbell and Christman 1982*a*, Gibbons and Semlitsch 1982, Dodd 1991); and 5) are highly visible, thereby subject to possible vandalism. Treefrogs (*Hyla* spp.) are drastically undersampled by most drift fences, although a modified version has proven successful (Murphy 1993). Treefrogs can also be sampled by sticking into the ground 1.0- to 1.5-m lengths of opaque white PVC pipes (2 or 2.5 cm in diameter), which will be used as refugia by some species of treefrogs (Domingue O'Neill 1995, Phelps and Lancia 1995, Moulton et al. 1996).

Drift-fence data should be deposited into a central repository that is accessible to researchers, biologists, land managers, and environmental consultants. Personnel turnover in state agencies sometimes results in the loss of drift-fence data, especially if the data have not been summarized in a report. Even if the raw data are still available, the methodology used and site locations are often lost or not reported, which negates the value of the data for future comparative studies. Most drift-fence data collected by the Florida Game and Fresh Water Fish Commission's (GFC) personnel are summarized and entered into its Wildlife Occurrence database, which contains a summary of all published drift-fence studies and data provided by biologists with the Florida Department of Environmental Protection (DEP).

METHODS

Sampling Period and Schedule

A drift-fence inventory of a given habitat could be deemed successful if ≈75% of the total species in the habitat are detected. A person unfamiliar with the herpetofaunal community of a particular habitat can compile a list of expected species by consulting a table giving the relative abundance of various herpetofaunal species that can be anticipated in that habitat type (see Enge 1997*a*). An alternative is to examine the results of other drift-fence surveys in that habitat type within the same region of Florida. These data can be found in Appendices A–R, where drift-fence surveys are grouped by habitat type and arranged from west to east in the Panhandle and from north to south in peninsular Florida. The names of habitat types used in this report follow the classification scheme developed by the Florida Natural Areas Inventory (1990). Common and scientific names of taxa used in the appendices are in accordance with Collins (1997) and Brown (1997); the species name is used if there are multiple subspecies occurring in Florida.

Whenever feasible, drift fences should remain open for ≥1 year to compile a reasonably comprehensive species list. In drought years, some amphibians forego reproduction and will be difficult to detect; sampling for at least 2 years is therefore recommended. Also, species that are rare or occur at low population densities are more likely to be captured during extended drift-fence surveys. However, long-term studies are often not feasible, so a reduced sampling schedule must be selected to maximize productivity.

When the cumulative number of species captured over time is plotted, there is typically an initial sharp peak in the number of species followed by a tapering off, although occasional later peaks will occur as species with marked seasonal activity patterns appear, such as winter-breeding amphibians. A decrease in the slope of the line of cumulative captures over time indicates that the number of species potentially trappable in drift-fence arrays for a given habitat has been approached.

If continuous sampling is not feasible because of time and manpower constraints, limited sampling can be used to target either the most productive periods or different seasons of the year. For most reptiles, peak activity occurs from April–June and September–October. The activity peaks for amphibians are usually correlated with periods of precipitation. The best time to trap winter-breeding frogs and salamanders in northern Florida is during November–December rains, whereas summer-breeding anurans can be captured during almost any warm month with sufficient precipitation, but May and June are probably best. Some anurans breed year-round during suitable weather and are usually easy to detect, unless they are explosive breeders such as the eastern spadefoot (*Scaphiopus holbrookii*) and gopher frog (*Rana capito*).

Climatic conditions and some herpetofaunal breeding seasons differ between northern and southern Florida. The winter dry season (i.e., November through April) in tropical southern Florida is more pronounced than in northern Florida, which means that most amphibian species in southern Florida start breeding in May, even those species that typically breed during the cooler months in northern Florida. Fourteen amphibian species that depend upon winter rains to provide suitable breeding and larval habitat, and 6 species that require 9–20 months in the aquatic larval stage, are absent from southern Florida (Means and Simberloff 1987). Reptiles in southern Florida often breed earlier in the year and have longer activity periods than in northern Florida.

If limited sampling during different seasons of the year is undertaken, it would likely be counterproductive to open traps for periods of <2 weeks, although some researchers use only 5-day sampling periods. If a short trapping period coincides with a period of weather (e.g., a cold dry spell) that is not conducive to herpetofaunal activity, drift-fence captures will be minimal. With longer trapping periods, one can expect more variation in the weather and a greater likelihood of periods with favorable conditions for herpetofaunal activity. Heavy precipitation, especially during the nighttime or after a prolonged dry spell, is the key to capturing large numbers of amphibians. An extra trip is required to open traps, so it is more time-efficient to have fewer, but longer, trapping periods. However, frequent trapping periods are less likely to miss out on peak activity periods (e.g., dispersal of newly metamorphosed amphibians or migration of adult amphibians to breeding ponds) or productive weather events (e.g., tropical storms) than are infrequent trapping periods.

Two possible trapping schedules are trapping in alternating months or during 2 weeks per month. If less sampling intensity is required, certain times of the year can be targeted to maximize productivity. The minimum trapping schedule should be 2 weeks during April, 2 weeks during June, and 2 weeks during September or October. In northern Florida,

additional sampling during 2 weeks in January or February may detect winter-breeding amphibians. An alternative trapping schedule is to opportunistically trap immediately after periods of heavy rainfall (Vogt and Hine 1982).

The minimum number of arrays needed to adequately sample a habitat is 2, unless there is only 1 small example of a habitat type (e.g., a depression marsh) in the study area. However, ≥3 arrays per habitat type is strongly recommended to achieve a more comprehensive species list. In terresterial habitats, arrays should be situated in various microhabitats, such as in the vicinity of wetlands, burrows, fallen logs, and/or snags. In some cases, it may be possible to locate arrays in such a way as to intersect movement corridors of animals, which may be channeled by topographic contours, or vegetative or detrital configurations. If possible, arrays should be situated ≥100 m apart so they are less likely to capture the same individuals and are more likely to sample possible areal differences in herpetofaunal communities. If statistical comparisons are desired, at least 4 arrays should be randomly situated in a habitat type, and homogeneous habitats should be surveyed whenever possible to minimize variance in the trapping data.

Drift-fence Material

Drift fences have been constructed of aluminum or galvanized valley (flashing), sheet metal, aluminum window screen, plastic-coated screen, hardware cloth, chicken wire, tarpaper, polyethylene, shade cloth, silt fencing, and pressure-treated boards. Traps can also be placed along natural barriers, such as fallen logs (Dodd and Franz 1995). Most researchers utilize aluminum or galvanized valley because it is readily available, relatively easy to install, self-standing, durable, and impenetrable. Galvanized valley is sturdier and less prone to damage during installation and subsequent events than the lighter, more malleable aluminum. However, galvanized valley will eventually rust in standing water and would therefore be unsuitable for long-term studies in some habitats. Proper installation of metal valley requires digging a trench, which is difficult in wetlands with unconsolidated substrates or standing water. Metal valley comes in different widths, but the width most suitable for drift-fence surveys is 50 cm (20"). When the fence is buried ≈12–15 cm in the ground, it forms a barrier ≥35 cm high.

GFC biologists have had success using silt fencing as a drift-fence material in both terrestrial and wetland habitats (Enge 1997*c*). Silt fencing is a black, woven, polypropylene material that controls sediment runoff from construction sites and can commonly be seen in use along highways. It is available from culvert companies or some of the larger hardware and home supply stores (e.g., Lowe's). The preferable silt fencing is 91.4 cm (36") wide and comes in 30.5-m-long (100') rolls with wooden stakes already attached. A good brand is SILTCO, which is made by Siltco Manufacturing, Inc., Ft. Myers, Florida. The cost for a roll of silt fencing is $20–30, which is less expensive than metal valley.

Silt fencing has proven particularly effective in sampling the herpetofaunal communities of wetlands, although it can also be used to sample upland habitats. GFC biologists have used silt fencing to sample the herpetofaunal communities of tidal marsh, depression marsh, basin marsh, wet prairie, swale, tree island, hydric hammock, floodplain swamp, dome swamp, strand swamp, basin swamp, spring-run stream, steephead ravine, mesic flatwoods, upland hardwood forest, xeric hammock, sandhills, and scrub. A minimum of 21 frog, 18 salamander, 1 crocodilian, 12 turtle, 10 lizard, and 32 snake species have been captured in funnel traps along silt fencing (Enge 1997*c*).

The woven material of silt fencing is permeable to water, which decreases pressure on the fence and minimizes trap displacement by flowing water deflected along the fence. Silt fencing can be installed in situations with flowing water, if the velocity and volume of the water are not too great. If installed across small streams, silt fences should be placed in such a way as to allow some water to flow underneath the fence. If the flowing water carries a high sediment load, sediment accumulation along the upstream side of the fence may eventually render the fence ineffective.

Array Design

A variety of fence lengths, trap combinations, and array designs have been experimentally used during drift-fence surveys (Vogt and Hine 1982). Prior to 1990, the drift-fence design used most frequently in Florida was developed by Campbell and Christman (1982*a*) and consisted of 4 fences (7.6 m [25'] long) in a plus-shaped configuration with 15 m (50') between opposite fences (Fig. 1A). Typically, a 19-liter (5-gallon) plastic bucket was buried at the end of each fence, and a double-opening screen funnel trap was placed on each side of each fence at the midpoint. The buckets were sometimes replaced with single-opening screen funnel traps (e.g., White 1983, Enge and Marion 1986). The arms of metal-valley arrays are typically

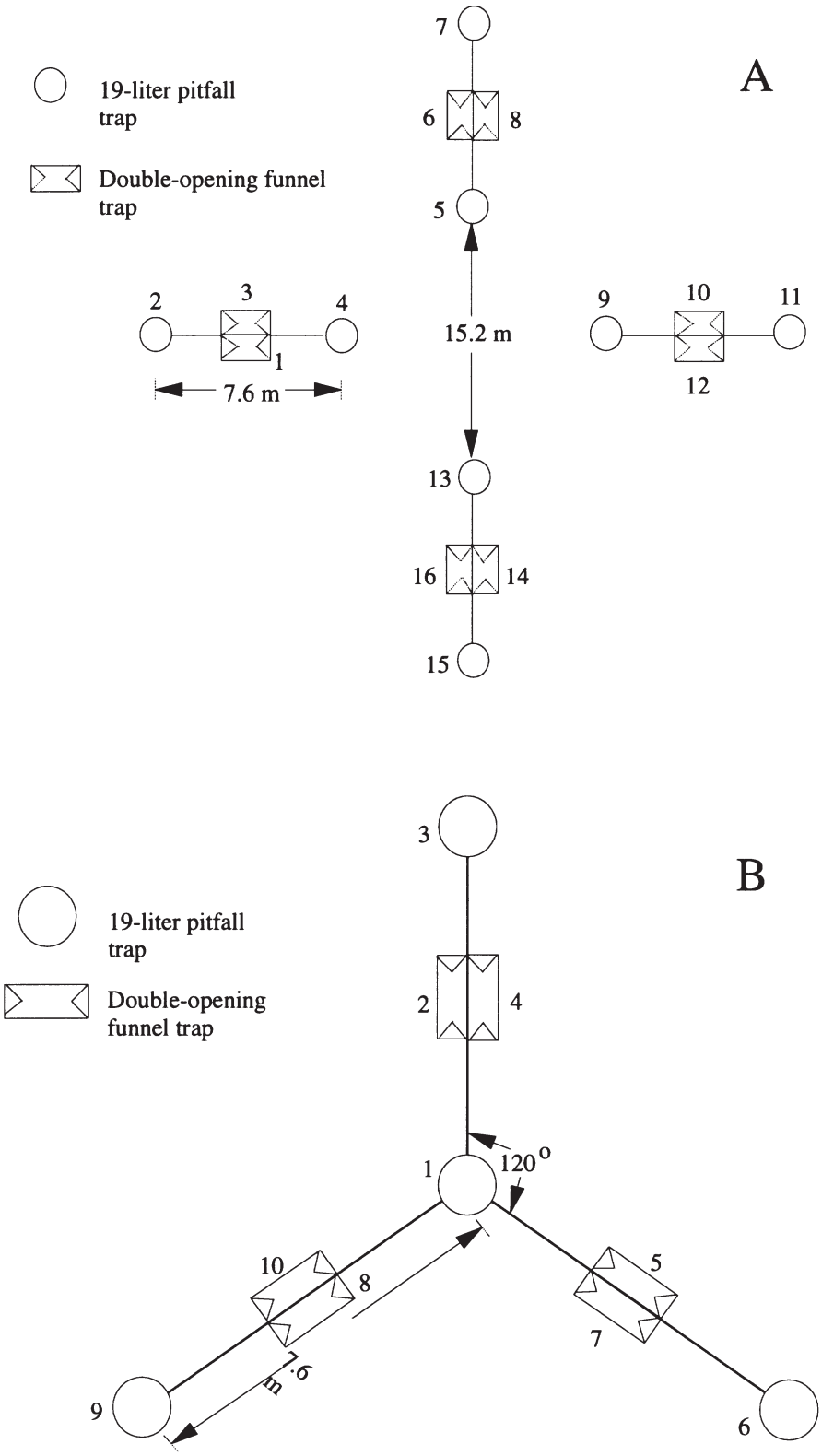

Fig. 1. Four-fence (A) and 3-fence (B) array designs using metal-valley drift fences and both pitfall and double-opening funnel traps (not drawn to scale).

7.6 m long, because 2 fences are made from 1 15.2-m-long roll of valley. Some researchers have opted to have the 4 fences converge in the middle (Vickers et al. 1985, Dalrymple 1988), and various types of smaller pitfall traps can be used (see Corn 1994).

An alternative drift-fence design the GFC has commonly used since 1990 is modified from Jones (1986) and has 3 arms radiating out from a centerpoint at 120° angles (to minimize directional bias). When used with metal valley, a 19-liter bucket is placed at the outer end of each 7.6-m-long arm and at the centerpoint of the array (a total of 4 buckets), and a double-opening screen funnel trap is placed on both sides of each fence at the midpoint (Fig. 1B). The effectiveness of the 3-fence and 4-fence array designs has been compared among 5 sites in northern Florida, and the 3-fence arrays captured comparable numbers and species of amphibians and reptiles as the 4-fence arrays despite using 1 less fence, 4 fewer buckets, and 2 fewer funnel traps (K. Enge, unpubl. data).

The GFC began using silt fencing during a survey of multiple habitats in 5 watersheds in the Southwest Florida Water Management District (Joiner and Godwin 1992*a*,*b*,*c*,*d*,*e*). Wetland habitats were sampled using 15.2-m-long silt fences with 4 double-opening and 2 single-opening funnel traps per fence. In a survey of Big Bend Wildlife Management Area (WMA), 3-fence arrays of silt fencing were used for the first time to sample wetland habitats, and 3-fence galvanized-valley arrays were used to sample terrestrial habitats (Enge and Wood 1998). Each silt-fence array had a single-opening funnel trap at the distal end of each 7.6-m-long arm on both sides of the fence, with a double-opening funnel trap placed on each side of the fence near the stake closest to the center stake (≈2.5 m away) (Fig. 2). Double-opening funnel traps were usually placed adjacent to or across a stake because the fencing material was more taut near stakes, and the traps could be fit more tightly to the fence. Two funnel traps were used at the distal end of each fence because the end stake occluded too much of the funnel mouth of a single trap. A typical 3-fence silt-fence array has 6 single-opening and 6 double-opening funnel traps.

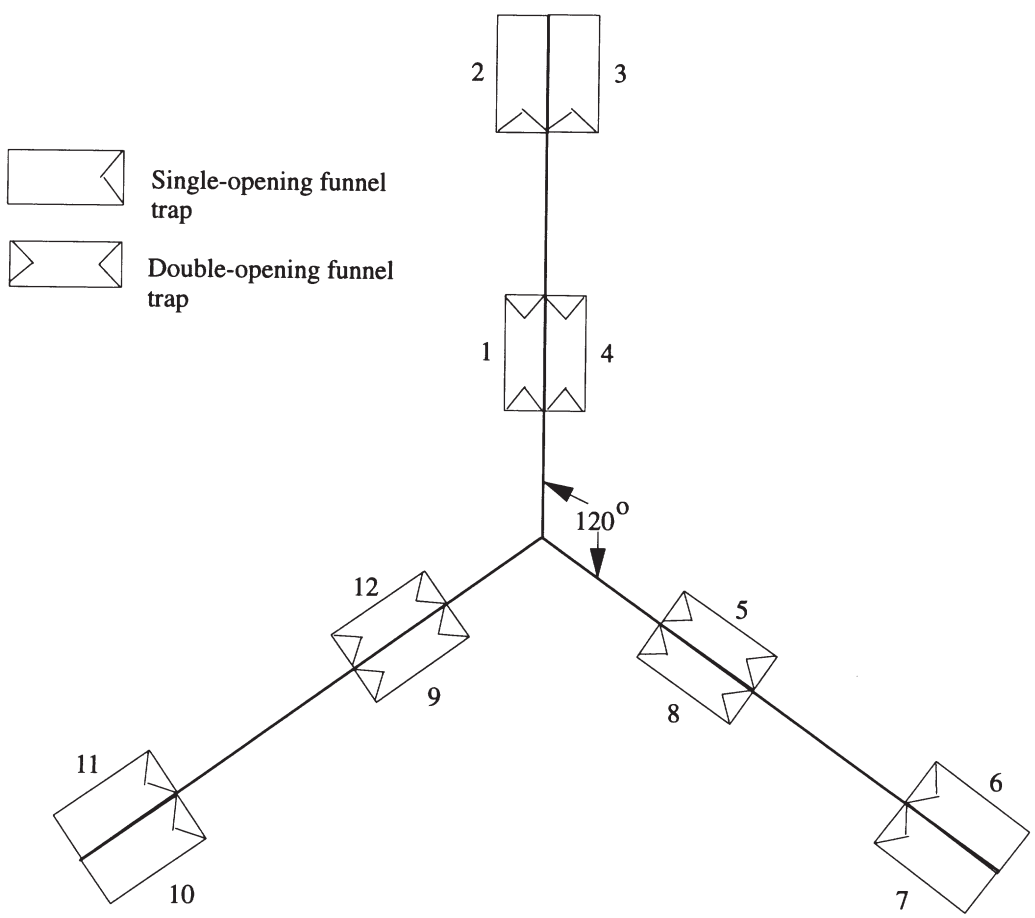

Fig. 2. Three-fence array design using silt fencing and funnel traps (not drawn to scale).

Three-fence arrays of silt fencing have been used to sample a variety of both terrestrial and wetland habitats at Chassahowitzka WMA (30 arrays) and Chinsegut Nature Center (9 arrays) (K. Wood, unpubl. data). In the Panhandle, 3 silt-fence arrays have been used to survey an upland hardwood forest (Enge 1997*b*), and 12 arrays have been used to survey steephead ravines and their associated streams (K. Enge, unpubl. data; Appendix L). Silt-fence arrays are cheaper and easier to install than metal-valley arrays, and they are apparently equally effective. Silt fencing provides a higher fence than metal valley, although the stakes and woven material may be easier for lizards and some snakes to climb (Enge 1997*c*).

The length of the arms of a silt-fence array depends upon the spacing between stakes. Silt-fence arrays with 3 7.5-m-long arms have been used, but it is easier and more productive to use an entire 30.5-m roll for 1 array, even if some arms have an extra stake and are therefore longer. A roll of silt fencing with the proper number of stakes could construct a 3-fence array with arms ≈10 m long, equivalent in total length of fencing to a typical 4-fence array.

The herpetofaunal community using a wetland can be surveyed by completely or partially encircling the wetland with fencing. This type of survey is not discussed in detail in this report, but such studies have been conducted in Florida at the Katharine Ordway Preserve-Swisher Memorial Sanctuary in Putnam County (Dodd and Charest 1988; Dodd 1991, 1992), the Apalachicola National Forest in Wakulla County (Sekerak 1994), and Eglin Air Force Base in Okaloosa County (Palis and Jensen 1995). A particularly notable study of this type has been conducted since 1975 around a Carolina bay on the Savannah River Plant in South Carolina (Gibbons 1990). Such studies can provide information on the breeding phenology and reproductive success of terrestrial amphibian species (e.g., Pechmann et al. 1989, Dodd 1993*a*, Semlitsch et al. 1993, Dodd 1994, Sekerak 1994, Dodd 1995, Palis and Jensen 1995) because the data collected include the number of breeding adults entering a wetland and the number of adult and immature animals leaving the wetland. Data can also be collected via that technique on the use of wetlands by turtles (Gibbons et al. 1983, 1990; Burke and Gibbons 1995) and snakes (Dodd 1993*b*, Seigel et al. 1995).

Fence Installation

The equipment necessary to efficiently install silt fencing or metal valley includes garden spades (i.e., square-tipped shovels) with D-shaped handles, machetes, axes, a 15-m tape measure, a compass, flagging tape, short stakes (wood, PVC, or metal), plastic-coated metal clothesline, a metal file, a large pair of tin snips, and a magic marker. The tin snips are needed to cut the fence material (silt fencing can be cut with a knife), and the metal file is needed to periodically sharpen the machetes, axes, and spades. The compass, tape measure, and flagging tape are needed to initially lay out the arrays, and the stakes and clothesline are needed as guides to dig trenches while installing fences. The magic marker is needed to number the traps, either on the top part of the nearest stake in the case of silt fencing or on the fence itself for metal valley. A staple gun with 3/8" staples is needed to attach silt fencing to wooden stakes. It is advisable to wear gloves while installing silt fences, and gloves are necessary to prevent cuts while installing metal valley. Other useful tools are brush axes, garden mattocks, rakes, and garden shears.

Two persons can install a drift-fence array, but installation is easier using 3 persons. If more than 3 persons are used, they should work on different arms of the array. The length of time required to install an array depends upon the difficulty of the habitat, especially the size and abundance of roots and other obstacles, such as limerock. Three persons typically can install an array in 2–3 hours, although an experienced team can install an array in 1–2 hours under favorable conditions. Proper selection of the location of an array will facilitate rapid installation. The 3 arms of the arrays ideally should not pass immediately adjacent to a large tree to avoid very large roots. The arms should avoid hummocks (often indicative of buried logs, stumps, upraised roots, or limerock) or uneven terrain. After visually assessing possible routes for arms of the array, the compass and tape measure should be used to determine the proper angles and lengths of the arms.

A machete or brush axe should be used to cut woody vegetation to ground level along the route of each arm of the array, and a spade or rake should be used to clear away leaves and sticks. Clearing of detritus makes digging the trenches easier and minimizes the amount of leaves and woody material entering the trench when it is later filled in with the excavated soil. Two sets of stakes ≈30 cm (12") long with plastic-coated metal clothesline strung between them, equal in length to 1 arm of the array, usually 7.6 or 10 m, can be pounded into the ground until the taut clothesline is flush with the soil or water surface. The clothesline can be used as a guide along which to dig the trench and to initially lay out the array instead of using a tape measure. Clothesline is better than string because it can withstand errant blows from an axe or machete and

is less likely to get tangled. The clothesline is particularly valuable while installing drift fences in standing water or in dense ground cover.

Silt fences can be quickly installed in wetlands with soft substrates (e.g., muck) lacking large roots by sequentially pounding the stakes into the ground. The bottom edge of the silt fence should be held taut during installation. The stakes should be sunk deep enough that ≈15 cm (6") of the lower skirting of the silt-fence material extends below the surface of the substrate. A spade or one's fingers can be used to push the silt fence into the substrate. Where substrates are soft, but fibrous root mats are present, a sharpened spade can be used to cut a slit in the ground and then alternately pulled and pushed to form a narrow V-shaped trench. Large roots encountered near the surface may have to be severed with an axe and a section removed. The stakes should then be sequentially pounded into place, and the spade or fingers can be used to push the fencing into the substrate. Tamping along the fence with one's feet after the fence is installed seals up the trench.

In terrestrial habitats, or in wetland habitats with large roots or extensive root mats, silt fencing can be installed by digging a trench (see Corn 1994). This is a more time-consuming method of installation but is necessary in most habitats. A vertical 15-cm-deep cut should be made with a shovel, a second cut ≈15 cm distant made at 45˚ to it, and the wedge of earth removed. Because silt fencing is much more flexible than metal valley, the depth and overall symmetry of the trench are not as critical as when installing valley. Differences in trench depth or topography will produce a wavy metal-valley fence, whereas a silt fence can be kept straight because the material is flexible and adjusts to varied contours. Subsurface roots or rocks can also be left intact with silt fencing without sacrificing the integrity of the fence. If a stake cannot be pounded deep enough into the ground because of a subsurface obstacle, the location of the stake can be moved by wrapping the silt fencing several times around the stake (this will obviously shorten the fence). In open habitats that are readily accessible from a road, a ditch witch (trencher) may be used to rapidly dig the trenches.

The silt fence should be held taut while pounding the stakes in, and the stakes should be tight against the vertical side of the trench, although this is not as important as when installing metal valley. Once all the stakes are pounded in, the trench can be filled in with soil over the lower skirting of the fence. Filling the trench is most easily accomplished if most of the dirt has been piled near the trench (and not trampled on) on the side opposite the vertical cut. The fencing is less likely to come out of the ground if the bottom edge is laid flat along the bottom of the trench. After installation, any sagging material can be tightened by stapling a fold of material to an adjacent stake. The soil along the fence should be smoothed with a spade and any obstacles to moving animals removed, particularly ones near the mouths of funnel traps.

Sharpened spades will slice through the smaller roots, and axes will be needed only for the largest roots. It is important to periodically sharpen the spades. In some habitats, garden mattocks may be helpful in scooping soil out of the trench and in levering out roots or rocks. Large root sections, root mats, sticks, and other debris should be removed from the fill before it is returned to the trench, unless insufficient fill is available.

To install a typical 3-fence array of silt fencing with 7.6-m-long arms, a 15.2-m length of silt fencing should be bent at the center stake to form 2 fences, and a third 7.6-m-long fence (without a stake at 1 end) then stapled to the center stake after the fabric edge is double-folded over ≈3 cm. Where the 15.2-m fence is bent in the middle to form 2 arms of the array, the stake should be inside the 120˚ angle so pressure is not exerted on the staples holding the material to the stake. Also, the silt-fence material should be wrapped around the end stakes twice to prevent the material from pulling loose from the stakes. The initial spacing between the stakes and the amount of silt fencing that is wrapped around the stakes determine the actual finished length of the arms of the array.

Removal of silt fencing is easier than removal of metal valley in most habitats. The fencing material can be pulled up with relative ease, except where it is buried deeply in consolidated substrates or penetrated by tree roots. A knife is sometimes necessary to cut the fencing material away from penetrating roots. Stakes difficult to remove can be broken off at ground level. Typically, silt fences are not reused, especially if plant roots have grown through the buried portion. Silt fences used to sample wetland habitats for 5 months, however, have been removed and reused the following year before being discarded. No noticeable deterioration of silt fences has occurred in studies lasting 1 year or more, but broken stakes have had to be replaced occasionally, especially in termite-infested habitats. A large pair of pliers or vise grips helps to grasp metal valley while pulling it out of the ground.

The condition of drift fences affects trapping success. Trespass rates of amphibians and reptiles over or under fences may vary depending on the climbability of the fence, the presence of stakes, the presence of overhanging or touching vegetation, and

the presence of burrows (Dodd 1991). The path along the drift fence should be kept relatively clear of obstructions, and a shallow trough along the fence, which often results from the loss of soil and roots while digging the trench, may help keep crawling animals near the fence.

Each array should be assigned a number in the order that they are typically checked or according to habitat type. Traps should be numbered in a clockwise direction as one would walk around each fence, starting at the middle of the array (Figs. 1 and 2). Signs can be posted on the array or nearby trees indicating that a wildlife study is being conducted, and informational notices can be placed at hunter check stations and/or offices in the area.

Trap Construction

The equipment needed to make funnel traps is 91.4-cm-wide (36") aluminum window screening, tin snips or heavy-duty scissors, an office stapler, staples, a magic marker, and a yardstick. To make the 20 cm (8") in diameter cylinder of a double-opening funnel trap, a piece of screen 73.7 cm (29") x 91.4 cm (36") is needed. To make the 25 cm (10") in diameter single-opening funnel trap, a piece of screen 88.9 cm (35") x 91.4 cm is needed. A 30.5-m-long (100') roll of screening will make ≈30 funnel traps, if the pieces are cut out in the most economical fashion.

In order to construct a funnel trap, the 2 cut edges of the rectangular piece of screen should be brought together (the machined edges should be at the ends of the cylinder created). The screen should be stapled together 1.3 cm (1/2") in from the edge (1.9 cm [3/4"] for single-opening traps) every 5 cm (2"). The edge should then be folded over 1.9 cm (2.5 cm [1"] for single-opening traps) on top of the open end of the staples. To produce a uniform fold without scalloped edges, it is best to make a 90° bend in the screen all the way down the seam and then go back and crease it down the rest of the way. The cylinder of the trap now has to be rolled back on top of the fold to form a seam. This is accomplished by reaching halfway into 1 end of the trap with the right hand while holding the seam tight to the ground with the fingers of the left hand. The right hand is then used to roll the cylinder toward the fingers of the left hand and then drawn with the right hand towards the body while pushing the cylinder flat against the seam. The cylinder should then be turned around and the procedure repeated on the other end until a perfect cylinder is formed. The finished seams of double-opening and single-opening funnel traps should be 1.9 cm (3/4") and 2.5 cm (1") wide, respectively.

Funnels can be made from semicircular templates of appropriate size traced onto window screen (Fig. 3). The 2 straight edges of the funnel should be brought together and stapled 0.6 cm (1/4") in from the edge (along the border of the machined edge if the template is cut from this area). The edge is then folded over 0.6 cm on top of the open end of the staples. To form the funnel, the procedure to form the cylinder should be repeated—the right hand should be inserted into the wide end of the funnel to roll it on top of the seam, which should be ≈0.6 cm wide.

The funnel should then be partially placed into 1 end of the cylinder, with the seam immediately adjacent to the cylinder's seam and stapled in place

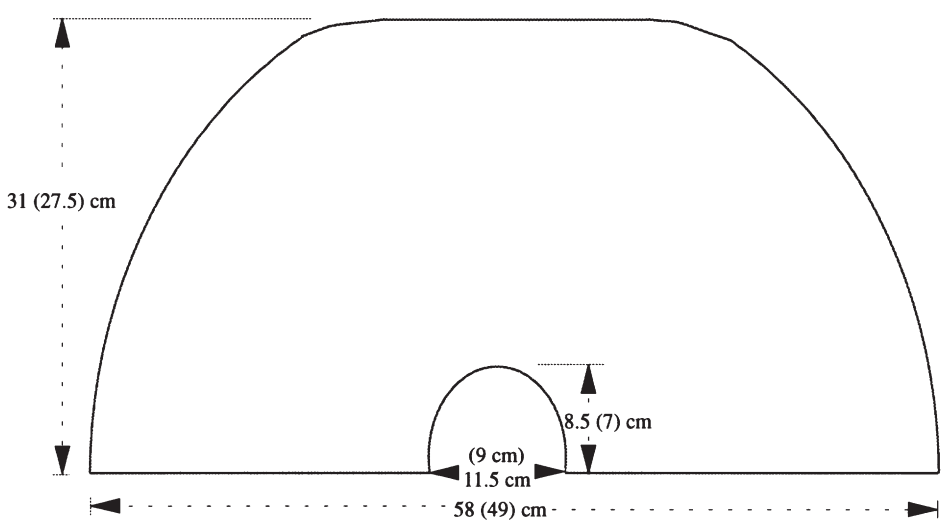

Fig 3. Funnel template with measurements for a trap 25 cm in diameter (numbers in parentheses are measurements for a trap 20 cm in diameter).

1.9 cm (3/4") from the edge along both sides of the double seam. Stapling should be done from the inside of the funnel so that the open ends of the staples face outward. The seams will be at the top of the finished trap. The funnel should be carefully stapled into the cylinder while working clockwise or counterclockwise around the trap. It is best not to put the funnel all the way in place initially because it will tend to go in too far. The funnel should be a tight fit. The screen of the funnel should not be bunched up too much in any single place, particularly not at what will be the bottom of the trap (opposite the seam). Staples should be placed every 5 cm (2"). Double-opening funnel traps will need a funnel placed in both ends of the cylinder.

The edges of the end of the trap with the funnel need to be folded outwards 2.5 cm (1"). This is best accomplished by folding the edge all the way back at the double seam and pressing it down to make a crease. The edge of the funnel mouth should then be folded partially outwards, but not creased (this avoids scalloping of the edges). Once the entire circumference of the trap is loosely folded outwards, the fold can be firmly pressed down. In order to hold the fold in place, the cylinder should be stapled from the inside of the funnel about 2.5 cm in from the end of the trap. Staples should be placed every 5 cm (2"). It is best to start stapling at the side opposite the seam, where the bottom of the trap will be. Often, the folding process will create bulges in the material, which can be taken up by forming a dart (i.e., tapered pleat) on the side of the trap near the top. This will create a circular instead of an oblong opening to the trap.

The trap then needs to be shaped into a semicircle with a flat bottom and non-bulging sides in order for the trap to lie flat on the ground and fit tight to the fence. The bottom of a single-opening funnel trap should be ≈23.5 cm (9.25") wide, whereas the bottom of a double-opening funnel trap should be ≈17.8 cm (7") wide. The funnel entrance should be shaped before shaping the body of the trap. Care must be taken with double-opening funnel traps to not have the traps twisted so that only 1 end lies flat. Single-opening funnel traps need only to be shaped about 3/4 of the way, because the other end is closed by holding the edges flush and folding them over 7.6 cm (3"). This fold should then be clipped shut using either 6 jumbo paper clips (preferably galvanized) or alligator clips. The fold should be horizontal so that the trap has the silhouette of a whale, not a tuna. The final step is to make sure there is a staple on each side of the bottom corners of the funnels, because this is where animals will try to escape. One should also make sure that the funnel openings are round and that wires are not protruding into the opening, as this might deter animals from entering.

Care should be taken not to crush funnel traps during transportation. When carrying them, it is best to hold double-opening funnel traps by the end (4 per hand, with a finger in each trap) and single-opening funnel traps by the closed end (6 can be carried per hand). Traps should last for ≈1 year without requiring restapling of seams, except for traps in standing water (the staples will rust and periodically have to be replaced).

Trap Installation

Extensive drift-fence studies using both funnel traps and pitfall traps (i.e., 19-liter plastic buckets) have indicated that the only amphibians or reptiles that funnel traps will not capture are large turtles, although they will sometimes fall into pitfall traps. Pitfall traps, however, will seldom capture large snakes, and large ranid frogs will often leap out of pitfall traps, although some preferentially use them as refugia (Shields 1985). Treefrogs can easily climb out of buckets, and small frogs and salamanders can sometimes escape using surface adhesion. In sand pine (*Pinus clausa*) scrub, pitfall traps have captured significantly higher numbers of anurans and lizards than funnel traps, but have failed to capture large snakes (Greenberg et al. 1994*a*). Small, fossorial reptiles (e.g., mole skink [*Eumeces egregius*], sand skink [*Neoseps reynoldsi*], Florida crowned snake [*Tantilla relicta*]) are usually more susceptible to capture in pitfall traps than in funnel traps, so pitfalls should be used in conjunction with funnel traps in xeric upland habitats (i.e., scrub, sandhill, xeric hammock), where these species are an important component of the herpetofauna. Pitfalls are more efficiently installed along metal valley than along silt fencing, so metal-valley arrays may be preferable in xeric uplands. Besides diversity of captures, other advantages of funnel traps over pitfalls are ease of installation, removal, closing, and checking. Also, mammals are less likely to be captured and killed by funnel traps than by pitfall traps, and pitfall traps can decimate local populations of small mammals (Bury and Corn 1987). Most mammals either avoid going into funnel traps or find their way out (sometimes by chewing or ripping a hole in the trap).

Pitfall traps are typically installed in holes dug with a posthole digger. Garden shears are sometimes helpful in removing roots protruding into the hole. The lip of the bucket should be flush with the soil surface, and the fence should extend into the

bucket 3–5 cm. This can be done by slitting the bucket; but the bucket will tend to deform if this is done. A better method is to slit the bottom of the fence to fit over the lip of the bucket. The side of the slit nearest the fence should be straight, whereas the side closest to the bucket should have a wider section removed to accommodate the lip of the bucket. If the piece hanging into the bucket is too narrow, it might pull out of the bucket while the trench is filled with dirt. Duct tape can be used on this overhanging piece to prevent injuries while checking traps. Buckets have not yet been used along silt fences, but the best method would probably be to run the silt fence through the bucket and to pound the end stake in on the opposite side of the bucket. The bucket should be slit to allow the silt fence to extend into the bucket.

Holes should be predrilled in pitfall traps ≈2 cm from the bottom to permit drainage of rainwater and to prevent the pressure of rising groundwater from forcing buckets out of the ground. If the groundwater is high, the buckets will be constantly flooded, decreasing their effectiveness in trapping most species and resulting in drowning of some species. Small styrofoam rafts may prevent some specimens from drowning. If holes are not used and there are problems with buckets popping out of the ground, iron rebars can be used to hold the buckets in the ground.

Funnel traps should be well constructed and carefully placed along the fence. Shaping funnel traps into semicircles allows them to fit tightly to the substrate. In non-flooded habitats, a shallow depression about the length of the funnel trap should be scraped with a shovel so the trap can sit slightly below the soil surface. When available, loose material (e.g., sand, leaf litter) can be brushed into the mouth of the funnel opening to obscure any raised lip that might deter an animal from entering the trap. All traps should be equipped with moistened sponges to help prevent desiccation of trapped animals, and sponges should be remoistened each time the traps are checked. If desiccation is a serious problem, crumpled pieces of wet cloth towels can be used instead of sponges. Towels will remain moist much longer than sponges, but towels make checking traps for animals more difficult.

Trapping should be avoided in areas infested with red imported fire ants (*Solenopsis invicta*), whenever possible. Fire ants often prey on trapped animals, and their presence in an area will result in high mortality rates. Fire ants can reduce relatively large vertebrates to skeletons within a few days, often making identification impossible. If fire ants are a problem, they may be controlled in the vicinity of the traps by using Amdro™.

Single-opening and double-opening funnel traps should be fashioned from 91.4-cm-wide (36") aluminum window screen fastened together with ordinary office staples. The finished traps are ≈86 cm (34") long. The double-opening funnel traps are cylinders ≈20 cm (8") in diameter with funnel openings ≈5 cm (2") in diameter. Single-opening funnel traps are either 20 or 25 cm (10") in diameter; the larger traps have a funnel opening ≈6 cm (2.5") in diameter. Funnel openings with a large diameter will admit larger animals, but also may result in more escapes. Animals can be expected to escape more readily from funnel traps with 2 openings than ones with 1 opening, but they have a greater likelihood of entering double-opening funnel traps.

Double-opening funnel traps are typically held in place along the fence by leaning shade covers against them at ≈45° angles. Shade covers should be laid over the closed end of single-opening funnel traps. Shade covers typically consist of 41 cm (16") x 41 cm squares of 6-mm-thick (1/4") tempered masonite. Sheets of masonite can be purchased in 2.44 m (8') x 1.22 m (4') sheets, which will make 18 shade covers. An alternative material is tileboard, which is thinner than masonite and has 1 white side, which may help reflect heat. If shade covers are not used, palm (i.e., *Serenoa repens*, *Sabal* spp.) fronds or debris can be used to provide shade. During hot weather in open habitats, shade covers will not prevent overheating of some animals. The addition of a layer of sand in the bottom of a trap may help, or the shade covers can be coated with a reflective material such as aluminum foil.

Masonite shade covers are typically propped at ≈45° angles over pitfall traps at the end of metal-valley drift fences, but there are other options for placement and types of pitfall shade covers. Shade covers can also consist of boards elevated 2–5 cm above the soil surface (Campbell and Christman 1982*a*, Corn and Bury 1990), which provide more protection from sunlight than propped shade covers. These close-fitting shade covers may be more conducive to capturing small, refugia-seeking animals but prove aversive or a barrier to larger animals, such as turtles. Close-fitting shade covers may prevent many frogs that are strong leapers from entering pitfalls, but they may also prevent frogs from readily escaping. Propped shade covers could conceivably deflect leaping frogs, causing them to fall into the pitfall traps. If sufficient water is present at the bottom of the pitfalls, frogs would have difficulty escaping despite the non-obstructing shade cover. Close-fitting shade covers may reduce predation of trapped animals by mammals and birds. To shade the center pitfall trap in a 3-fence metal-

valley array, a masonite shade cover can be balanced horizontally on the 3 intersecting fences.

Traps can be staked in place or attached to the material of the fence to prevent displacement by flowing water or animals. In aquatic situations, traps can be kept tight to the substrate or suspended along the water surface. Aquatic traps can be staked to the substrate using 2-mm-diameter aluminum wire stakes bent into an "L" shape; the short end of the "L" is placed into the mouth of the trap. However, properly placed shade covers are often sufficient to hold aquatic traps in place. Traps completely submerged will typically capture tadpoles, amphiumas (*Amphiuma* spp.), sirens (*Siren* spp., *Pseudobranchus* spp.), aquatic turtles, and aquatic snakes (e.g., striped crayfish [*Regina alleni*], glossy crayfish [*R. rigida*], black swamp [*Seminatrix pygaea*], eastern mud [*Farancia abacura*]), many of which are susceptible to drowning. Traps suspended along the water surface will capture some of the aforementioned species plus frogs (including breeding treefrogs, which are undersampled in terrestrial habitats) and various snakes. Traps that are tight to the substrate but partially submerged are most effective at capturing the entire complement of species.

Trapping success is affected by the quality of funnel trap construction, maintenance of fences and traps, and proper placement of traps. Funnel traps should have intact seams and lack holes, funnel openings should be circular and unobstructed by debris or by wires projecting from the edges of the window screen, and traps should be placed flush against the fence and ground (or slightly below the soil surface). Shade covers should be positioned so that they do not occlude funnel openings and are unlikely to become dislodged and adversely affect trapping success. Lizards, especially green anoles (*Anolis carolinensis*), and treefrogs will often perch on funnel traps under propped shade covers. Occasionally, animals will be found hiding under funnel traps.

When not actively trapping, funnel traps should either be removed from the study area, tied vertically against a tree (lizards are occasionally captured this way), or placed off the ground in bushes. Pitfall traps should be tightly covered using the plastic lid, if possible. If the lid is not available or will not function because of a deformed bucket or obstructing fence, a short slit can be cut in the edge of a shade cover such that it fits onto the end of the metal-valley fence. The shade cover must lie flat on top of the bucket, and sand should be piled around the rim of the bucket. Pitfall traps should be checked every month while fences are not in use to ensure that the pitfalls remain closed. Shade covers and even plastic lids will deteriorate over time, and pitfall covers are occasionally stepped on and destroyed by animals or humans. A better way to close a pitfall trap is to turn the bucket upside down in the hole, but it will take longer to re-open traps.

Checking Traps

Traps should typically be checked at least twice per week to minimize mortality of trapped animals, more frequently during periods of heavy precipitation or very hot weather. However, during winter months with little precipitation and reduced herpetofaunal activity, drift fences in some habitats can be checked only once a week, as long as mortality remains minimal. If trapping is being conducted to detect protected species that are prone to dying during prevailing weather conditions, traps should be checked daily. Corn (1994) recommends checking traps at least every 3 days. Fences that completely encircle breeding ponds should be checked daily so as to minimize the disruption of amphibian populations and movements. Gibbons (1990) and Dodd and Scott (1994) discuss the methodology for drift fences encircling wetlands.

The frequency of checking traps affects trapping success. Frequent checking will reduce mortality, escapes, and depredation of trapped animals. Trapped animals in some habitats are often depredated by raccoons (*Procyon lotor*), fire ants, beetles, arachnids, and snakes. Frequent checking will also minimize the amount of time displaced traps are nonfunctional. Frequent trap displacement may result from mammals (particularly raccoons and feral hogs [*Sus scrofa*]), large turtles, or flowing water. The percent of unidentifiable carcasses will also be reduced by frequently checking traps.

A plastic bucket or jug of water should be carried along to rehydrate dry sponges, and care should be taken to preclude shade covers from covering the sponges, preventing them from being remoistened by rainfall. In xeric habitats, sponges remain moist for <2 days. Debris that accumulates in the funnel traps should periodically be removed to allow easier detection of trapped animals, although a layer of sand or mulch might prevent some animals from desiccating or overheating. Insects and crayfish should be shaken out of the traps occasionally because some of them will prey upon trapped animals and/or eat the sponges. The ground surface along the drift fence should periodically be smoothed and obstructing debris or regenerating vegetation removed, particularly near the mouths of funnel traps.

Traps should be carefully examined for small, inconspicuous live animals, carcasses, or skeletons. When checking funnel traps, they should be picked up, held horizontally at each end, and given a couple vigorous shakes to dislodge animals concealed in corners or underneath the sponge or debris (small animals will sometimes wedge themselves in the seams). Funnel traps submerged in water should be picked up and vigorously shaken to remove the film of water on the screening, which will allow easier viewing of the trap's interior. To view trapped animals in aquatic traps coated with a layer of algae or scum, the animals should be carefully shaken into 1 end of the trap for viewing through the funnel opening at the opposite end of the trap. Debris in the bottom of pitfall traps should be searched and water in pitfall traps should be swept with an aquarium net. Buckets containing rain water should be bailed out, but bailing will not work for buckets filled with ground water if drainage holes are present. Care should be taken when removing a shade cover to avoid the possibility of being bitten by a venomous snake or stung by an insect. Wasps, scorpions, and black widow spiders (*Latrodectus mactans*) will enter traps, and they may survive for many weeks unless removed or killed.

Animals can easily be removed from funnel traps by carefully everting the funnel and shaking them out. Lizards are especially difficult to shake out of traps and may have to be removed by sticking one's fingers or large forceps through the funnel opening. Large animals in single-opening funnel traps can be removed by removing the paper clips at the closed end. It is difficult to catch lizards and ranid frogs shaken out of funnel traps, so a good strategy is to dump them into a bucket or large, clear plastic bag. Any wires projecting into the funnel opening should be bent back so that animals will not be deterred from entering, and funnel openings deformed by removing animals or by predators should be reshaped. Traps that have been trampled or mauled can be reshaped. Small holes in traps can be repaired by folding the screening over and stapling it in place, and larger holes can be repaired using screen patches or possibly duct tape (on both sides of the hole so that no sticky surface is exposed). Severely damaged or rusted traps should be replaced. Traps in standing water will periodically need to have their seams restapled.

Captured animals should be released ≥3 m away on the opposite side of the fence. In dry conditions, amphibians should be placed under debris or partially buried in moist soil. Dehydrated animals should be placed in water for a few minutes before release, or they should be released in shallow water, if feasible. In open areas, animals should be released near cover.

Species identification can sometimes be difficult, especially among anurans and snakes that exhibit considerable variation in coloration and/or pattern. Newly metamorphosed amphibians and immature reptiles often do not resemble the adults. Larval amphibians are especially difficult to identify and are therefore typically not included in drift-fence data. Questionable specimens should be retained for examination by an expert. Depredated or desiccated specimens can often be identified by experts; these specimens should be temporarily stored by freezing them in a plastic bag of water. Persons knowledgeable about amphibian and reptile identification can be reached at most major universities, various state and federal wildlife agencies, and in the private sector (e.g., environmental consultants, local herpetological societies, pet store employees). The Herp Range at the Florida Museum of Natural History, University of Florida, Gainesville, has a huge collection of preserved specimens and can assist in identification.

The best field guide for information on amphibians and reptiles is Peterson's (Conant and Collins 1991), but the number of taxa illustrated is limited. For novices at amphibian and reptile identification, books with photographs and drawings pertaining only to Florida taxa would be more useful. The 3-volume series on Florida herpetofauna by Ashton and Ashton (1988; 1991*a*,*b*) contains both photographs and drawings, although some are misidentified (e.g., Florida crowned snakes, eastern glass lizard [*Ophisaurus ventralis*]) and do not represent Florida specimens. There are numerous excellent photographs in *Florida's Fabulous Amphibians and Reptiles* (Carmichael and Williams 1991). There is also an Audubon Society photographic guide to North American herpetofauna (Behler and King 1979), but the scientific names of several species have changed since it was published. Mammals can be identified using *Mammals of Florida* (Brown 1997).

Dead, desiccated amphibians, especially treefrogs, will often appear uniformly dark and are difficult to identify. The color and pattern will often partially reappear if the specimen is rehydrated in water. This can often be done successfully in the field, but it is more effective if the specimen is placed in water in a refrigerator for a longer period of time. Experts can often identify depredated specimens by a small patch of skin or skeleton. Depredated mammals can be identified by their skulls, and the skull is the best means of identifying shrew species (shrew skulls should definitely be saved). Drowned mammals are easier to identify

once their fur dries and returns to its natural color. Skulls and fresh carcasses of mammals can be deposited in the Mammal Range at the Florida Museum of Natural History.

Processing Specimens and Recording Data

If the primary goal of a given study is to compile a list of species, the only information that needs to be recorded is the date, array number, trap number, species, age class, and status (see Appendix S and the following instructions). If one wishes to interpret the relative abundance data and eliminate recaptured individuals during analyses of the capture data, trapped animals should be weighed, measured, sexed, aged, and individually marked.

Voucher specimens of each unprotected species, particularly new county records, should be deposited in the Herp Range at the Florida Museum of Natural History. Dr. David Auth is the curator there and should be notified prior to depositing a large collection of specimens (he probably should be consulted prior to initiating the study to find out whether he wants specimens from that area and how he wants them preserved and delivered). A color slide with the pertinent collecting data would suffice for protected species. Specimens can be transported from the field in plastic bags or containers, but large snakes should be kept in cloth sacks (e.g., pillowcases). During hot weather, live and dead animals should be kept in a cooler with a container of ice. Reptiles are commonly killed by freezing them in a plastic ziplock bag, and amphibians by freezing them in water-filled bags. Although freezing is a humane method of killing amphibians and reptiles, various chemicals are the preferred method of killing to leave specimens in a relaxed condition (Pisani 1973, Karns 1986, Anonymous 1987). Pisani (1973) and Karns (1986) provide methodology for fixing specimens in formalin, preserving in alcohol, and labeling. Humane guidelines for collecting, restraining and handling, marking, housing and maintaining in the field, and disposing of amphibians and reptiles have been developed (Anonymous 1987).

A sample form used to record drift-fence data is included as Appendix S. This data form corresponds to a database file in dBase IV. A supply of data forms should be photocopied on write-in-the-rain paper. The top of the form should always be completed and a separate page used each time the traps are checked. If multiple pages are used during a trapping session, they should be individually numbered (e.g., Page 1 of 2). A notebook can be used instead of data sheets and a clipboard.

Array and **trap** numbers should be recorded for each observation. If a noteworthy (i.e., unusual or first record for the habitat) animal is captured, observed, or heard calling <50 m from a drift-fence array, the array number should be recorded and 99 (= observation) used for the trap number. If a noteworthy animal is observed or heard calling >50 m from an array (e.g., while driving or walking to the array), the species should be recorded, 99 entered in the array column (or leave it blank), and the location entered in the Notes column.

The four-letter **species** codes suggested consist of the first letter of the genus and the first 3 letters of the specific epithet. For example, the species code for the southern toad (*Bufo terrestris*) is BTER. A list of species codes for most amphibian, reptile, and mammal species susceptible to capture by drift fences is provided in Appendix T. Handy booklets to carry along while learning scientific names are the GFC's *A Checklist of Florida's Amphibians and Reptiles* (Moler 1990) and *A Checklist of Florida's Mammals* (Brown 1994), although several scientific names have changed since their publication. When a bird is trapped, BIRD can be used for the species code and its common name entered in the Notes column.

The **age** class codes suggested are: A = adult; I = immature, juvenile, or subadult; L = larva (tadpole); N = neonate (newly hatched or metamorphosed); and U = unknown. Larval amphibians are often difficult to identify and too numerous to count, so are typically not recorded. If recorded, the GFC computer program used to summarize the data excludes larvae. Because age class is often subjective, depending in large part on the interpretation or experience of the observer, it is advisable to also record the snout-vent length.

Recording the **sex** of an animal is optional in most studies, and some species cannot easily be sexed. The suggested sex codes are: M = male, F = female, and U = unknown. During the breeding season, male anurans can often be identified by dark horny pads on their front toes, swollen thumbs, and/or throat pouches (darkened skin and/or loose folds). During the breeding season, male salamanders (e.g., newts [*Notophthalmus* spp.]) may have swollen cloacae, and male *Eurycea* often have well-developed cirri (downward projections) from the nostrils. Male southeastern slimy salamanders (*Plethodon grobmani*) have large, circular glands under the chin. Eggs can sometimes be seen through the belly of gravid amphibians (they may only be visible in the groin area of anurans).

In turtles, males have longer tails than females, and the cloacal opening in males is located farther from the rear of the plastron. Also, male turtles of

some species, such as box turtles (*Terrapene carolina*), have a concavity on the plastron. Lizards, such as the six-lined racerunner (*Cnemidophorus sexlineatus sexlineatus*), may have sexually dimorphic coloration. Some male skinks (i.e., *Eumeces anthracinus*, *E. fasciatus*, *E. inexpectatus*, and *E. laticeps*) develop reddish coloration on the jaws or over the entire head during the breeding season. Male *Sceloporus* can be identified by their larger and brighter blue belly and throat patches, and male *Anolis* can be identified by their prominent dewlap. The broad base of the tail of male lizards often has hemipenal bulges. The hemipenes of small lizards and snakes can usually be everted by using the thumb to apply pressure in the proper direction (only experienced persons should attempt this). Snakes can often be visually sexed by tail length and width; a male's tail is longer and tapers more gradually than a female's (males also have more subcaudal scales). Larger snakes can be definitively sexed by carefully inserting a smooth, blunt, lubricated probe through the cloacal opening into 1 of the hemipenes; the inverted hemipenes are located in the tail. The probe will usually extend a distance of ≤2 subcaudal scales into a female snake's tail before meeting resistance, whereas the probe will usually extend ≥4 subcaudal scales into a male's tail. The bulges of eggs can sometimes be seen or palpated in gravid lizards and snakes.

Snout-vent (S-V) **length** should be recorded in millimeters. If time permits, the S-V length should be recorded for all captured animals. If the number of captures precludes complete processing, only the S-V length for uncommon species can be recorded. Body **mass** is optional and should be recorded to the nearest tenth of a gram using the appropriate Pesola spring scale. This column is the least important one if time is limited. However, uncommon animals should be weighed whenever possible. Ideally, a representative series (at least 10) of body weights and corresponding S-V lengths should be taken for each species. Dead animals should not be weighed unless they are fresh and appear normal (i.e., not dehydrated or drowned).

In mark-recapture studies, most amphibians (except for sirens), reptiles (except for glass lizards [*Ophisaurus* spp.]), and small mammals can be individually marked with the appropriate **identification number**. Lizards and large snakes should always be individually marked, but to save time and to make identification easier, all amphibians can be marked using the same number. Ferner (1979) provides marking techniques for amphibians and reptiles. Marking animals is not necessary if the sole intent of a study is to compile a species list and get a general idea of relative abundance.

Toe clipping is an efficient means of marking amphibians and lizards, and it is does not affect the animal's survival provided that ≤2 non-adjacent toes per foot are removed and that toes essential for burrowing, climbing, amplexus (e.g., thumbs of anurans), or nest excavation are not removed (Anonymous 1987). A good toe-clipping numbering system for amphibians, lizards, and small mammals involves marking multiple animals as 22, which removes 1 toe from the right front foot and usually the longest toe from the right hind foot (Fig. 4). To save more time, but at the expense of subsequent positive identification, the number 2 or 20 can be used, which only removes 1 toe from the right front or hind foot, respectively. Fewer reptiles than amphibians will be captured, so it is less difficult to keep track of their numbers; however, you may decide not to individually number very abundant lizards, such as ground skinks. Snakes can be marked by removing one-half of a ventral scute(s) with a small surgical scissors (Fig. 4). Care should be taken in marking small snakes, because they are easily injured. Turtles can be individually marked by notching their marginal scutes with a hacksaw blade (Fig. 4).

The suggested codes for the **recapture?** column are: Y = yes, N = no, and U = unknown, which applies to species that are not marked and to animals whose marks cannot be ascertained because they were depredated or escaped during handling.

The **status** of each specimen should always be recorded. The first character is: A = alive or D = dead. The second column corresponds to the disposition of the specimen. The codes for disposition are: D = discarded, E = escaped, K = kept (specify reason in the Notes), M = museum, and R = released. The most commonly used status codes are AR (alive, released) and DD (dead, discarded).

The **notes** column should contain why a specimen was kept, anything unusual about captured animals (e.g., missing body parts, behavior, color, gravid), habitat disturbances, weather patterns, etc. It is also advisable to record which fences are standing in water and possibly take a water depth at the center of the array.

While checking traps, a tackle box should be carried that contains all necessary equipment to check traps, repair traps or fences, and process or collect specimens. Some of the following equipment is unnecessary if not marking or measuring animals:

1. 10-g, 50-g, 100-g, and 500-g Pesola spring scales with clips and possibly a 2-kg scale with a hook (for large snakes and turtles);
2. 2 clear plastic metric rulers (these are easily lost; clear rulers are best because snout-vent

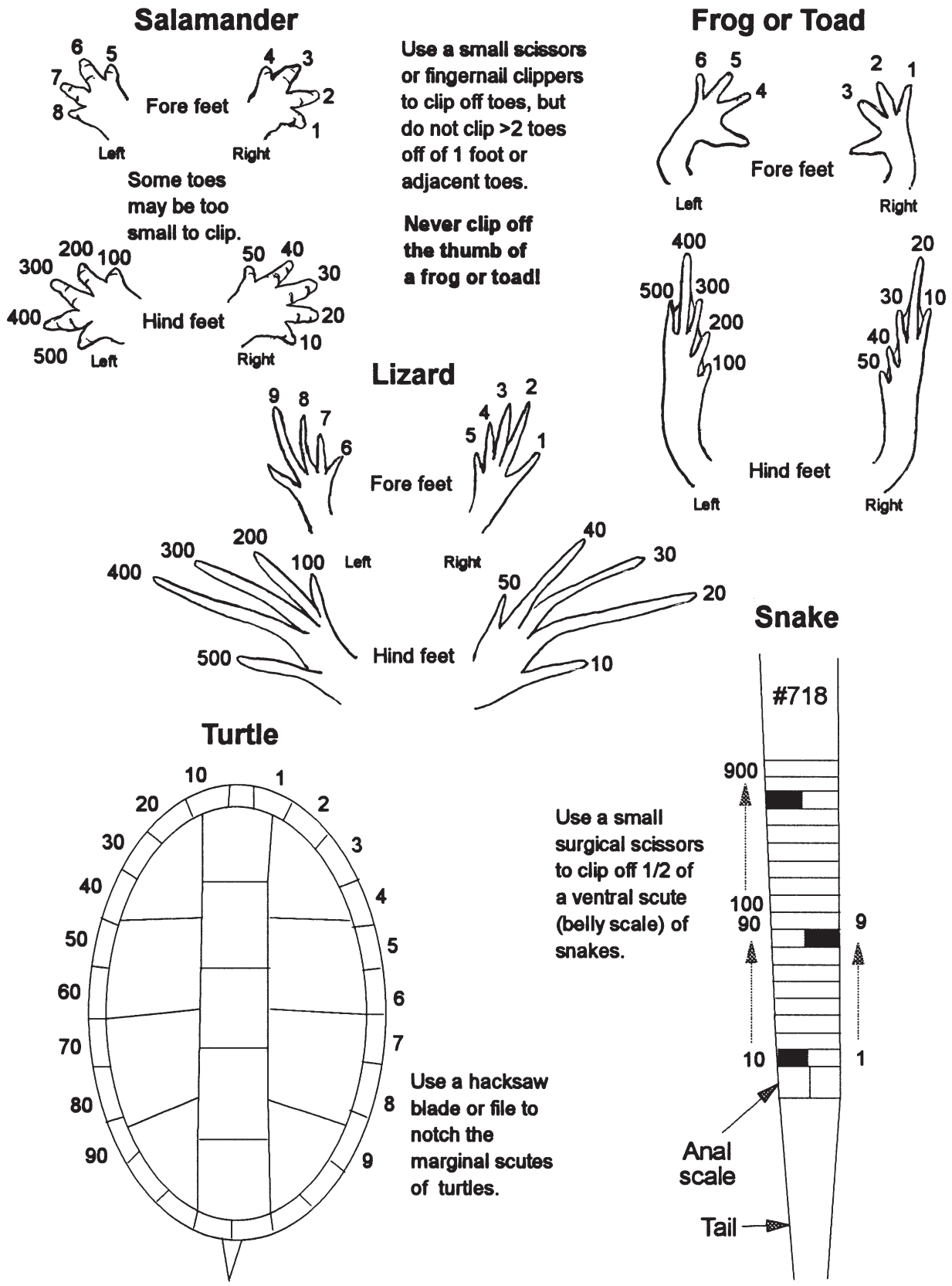

Fig. 4. Numbering system for marking amphibians and reptiles.

lengths of salamanders and lizards can be taken by pressing their underside flat to the ruler and looking at them from below);
3. 1 small tape measure for larger snakes;
4. 1 small pair of scissors (surgical or fingernail) to mark animals (a nail clippers may be used for toe clipping);
5. 1 hacksaw blade for marking turtles;
6. a small magnifying lens;
7. several 1-quart and 1-gallon plastic ziplock bags to hold or collect animals;
8. cloth bags or pillowcases to hold and collect snakes;
9. 1 office stapler to repair traps;
10. 1 staple gun to repair silt fences;
11. extra staples and jumbo paper clips;
12. several pencils and a sharpener or knife;
13. mosquito repellent;
14. amphibian and reptile checklist and field guides, if needed.

Unless one has experience handling venomous snakes, the best policy is to estimate their length and simply release them. The weight can safely be determined by dumping the snake into a large snake bag. A venomous snake can be safely marked by restraining its anterior half in a clear plastic tube with a small enough diameter that the snake cannot turn around (this should be attempted only if ≥2 persons are present).

Data Entry and Management

Following is the suggested dBase database file structure, with the type and width of the field in parentheses: DATE (date, 8), SITE (character, 1), ARRAY (character, 1 or 2), TRAP (character, 2), SPECIES (character, 4), AGE (character, 1), SEX (character, 1), LENGTH (numeric, 4), MASS (numeric, 6, 1 decimal place), IDNUMBER (character, 2), RECAPTURE (character, 1), STATUS (character, 2), MAXTEMP (numeric, 3, 1 decimal place), MINTEMP (numeric, 4, 1 decimal place), PRECIP (numeric, 5), H20LEVEL (numeric, 4), and NOTES (character, 50). This database corresponds with the trapping data form (see Appendix S).

Information from the top of the data form for entry into the database under the appropriate fields are site (i.e., a letter corresponding to the study area), date, maximum and minimum temperatures, precipitation, and water level (if appropriate). Entering data using the browse screen, which shows multiple records at one time, is preferable. Before going into the browse screen, F10 should be pressed and Tools selected. In Tools, Settings should be selected and the Bell turned to off and Carry to on. Escape should then be pressed to see just 1 record at a time with the fields arranged vertically, and F2 should be pressed to will activate the Edit screen.

Following are some tips for entering data. If 2 consecutive records are identical, the Browse screen will not allow entry of the second record (it assumes a mistake). To get around this, something in 1 of the fields (e.g., Site) should be temporarily deleted. After starting the next entry, the preceding entry can be returned to and the missing information put back in. When entering Length, spacing over in the field is not required, merely entry of the number and tabbing to the next field (the entry will automatically right justify). If there is already a number in a field, the new number should be entered and the space bar used to delete the remainder of the old number. When entering Mass, the number should be entered using a decimal point, and it will automatically go to the proper position in the field. Zeros will automatically appear in empty fields. To delete characters in a field, the space bar or delete key can be held down until it is gone, or control-Y can be used to delete the entire field. To delete a record, control-U can be used. The record will be deleted later when the command PACK is entered at the dot prompt. The End key can be pressed to go to the beginning of the Notes field. The down arrow can be used to go to the next record to be entered. When using the down arrow, care should be taken that fields (e.g., Notes) not visible in the screen are blank, so information is not inadvertently carried (i.e., copied) down for succeeding entries. Maximum temperature, minimum temperature, and precipitation should typically be carried on down for all records with the same date.

Data Analysis

If the aforementioned field names and other protocol are used, the SAS (SAS Institute 1988) program shown in Table 1 can be used to summarize the capture data by habitat, after appropriate modifications. The frequency tables generated will give the number of individuals of each species captured per habitat.

There are many variables that influence comparisons of trapping data among studies. A commonly used calculation of trapping success is the number of individuals captured per array or single fence per day (i.e., array-day) (Corn 1994), which is sometimes multiplied by 100 for comparative purposes. This standardized unit of trapping success is suitable for comparisons among studies employing similar drift-fence designs, but it

does not take into account the number or length of fences involved (there is probably a positive correlation between trapping success and total length of fencing used). Various researchers in Florida have used different drift-fence designs, so a more suitable measure of trapping success is the number of individuals captured per km of fence per day (i.e., km-day). For example, if 100 reptiles were captured over a 200-day period by 2 3-fence arrays with 10-m-long arms, 8.33 reptiles were captured per km-day (i.e., 100 reptiles/0.06 km/200 days). Neither of these standardized measures takes into account differences in the number, size, and type of traps used; configuration and number of fences used; and frequency of checking traps. Animals are less likely to escape, resulting in higher capture rates, if traps are checked frequently.

Summaries of most major drift-fence studies in Florida with the number of individuals of each species captured per habitat are provided in appendices A–R. Studies with <100 array-days are not included. Also not included are a few studies with too few captures to provide meaningful information. Two arrays operating for 1 year (i.e., 730 array-days) in a habitat is the minimum sampling needed to compile a representative species list, so studies that had <730 array-days or that used <45 m of fencing (the equivalent of 2 typical 3-fence arrays) should be considered inadequate inventories.

Studies conducted for a short period of time may catch more animals/unit effort than longer studies due to an initial surge in captures prior to depletion of local populations through removal or mortality of trapped animals. Studies employing continuous trapping may produce lower trapping success than studies targeting peak periods of activity or certain seasons. Amphibian captures may vary dramatically among years depending on precipitation events and successful reproductive episodes (Pechmann et al. 1989).

Capture rates vary among studies depending upon the marking and release methods used by the researcher. Studies that remove all trapped animals from the site can be expected to have lower overall capture rates, at least for reptiles, than studies that release all or most of the trapped animals. Most researchers in Florida typically release most trapped specimens, but some have conducted removal studies (i.e., Florida Game and Fresh Water Fish Comm. 1976, Labisky et al. 1983, White 1983, Enge and Marion 1986). The data presented in appendices A–R include recaptured animals, even for mark-recapture studies (e.g., Enge 1997*b*). Some studies (Mushinsky 1985, Dalrymple 1988) included untrapped animals observed in the vicinity of fences or under pieces of artificial cover placed nearby. The capture data presented for most GFC studies (i.e., Joiner and Godwin 1992*a*,*b*,*c*,*d*,*e*; Enge 1997*b*; Enge and Wood 1998) exclude trapped larval amphibians and all animals not actually inside traps. Animals observed in the vicinity of drift fences were noted by GFC personnel and are indicated by an "X" in appendices A–R. These observations were not included in capture totals or subsequent calculations, except in Appendix J, where the number of individuals captured was not reported for some species.

The minimum information obtained by drift-fence studies is species richness (i.e., number of species) of ground-dwelling forms. Species richness of amphibians and reptiles captured in the drift-fence studies is included in appendices A–R, but not diversity indices. Diversity measures that include abundance are confounded by differences in capture rates among species (Corn 1994). Commonly used diversity indices (e.g., Simpson's, Shannon's) incorporate both species richness (number of species) and evenness (the distribution of species' abundances). Because 1 or 2 species often dominate drift-fence captures, a relatively low species diversity index is obtained because of the low

Table 1. SAS (SAS Institute 1988) program which can be used to summarize capture data by habitat.

```
OPTIONS PAGESIZE=60 LINESIZE=150 PAGENO=1;
LIBNAME LIBRARY 'C:\SAS';
FILENAME VERTSURV 'C:\DATA\DBFILES\HERNANDO.DBF';
PROC DBF DB3=VERTSURV OUT=HERNVERT;
DATA LIBRARY.VERTTRAP; SET HERNVERT;
IF ARRAY='  ' OR ARRAY='99' THEN DELETE;
IF TRAP='  ' OR TRAP='99' THEN DELETE;
IF ARRAY=' 1' OR ARRAY=' 2' OR ARRAY=' 3' THEN HABITAT='SANDHILL';
IF ARRAY=' 4' OR ARRAY=' 5' OR ARRAY=' 6' THEN HABITAT='XERHAMM';
IF ARRAY=' 7' OR ARRAY=' 8' OR ARRAY=' 9' THEN HABITAT='BASMARSH';
PROC SORT OUT=LIBRARY.VERTSORT;
  BY SPECIES HABITAT;
PROC FREQ;
  TABLES SPECIES*HABITAT /OUT=LIBRARY.VERTFREQ;
RUN;
```

evenness component (even if species richness is high) (e.g., Enge and Marion 1986). The numerical domination by a few species may be more a reflection of these species' susceptibility to capture by drift fences than their abundance relative to other species in the habitat.

Comparisons of species richness among different habitats may be invalid due to behavioral differences of a species in different habitats. Habitat differences (e.g., hydroperiod, density and structure of vegetation, soil exposure, insolation) may influence the degree a species moves or exhibits arboreal, terrestrial, or fossorial activity, thereby affecting the likelihood of individuals encountering drift fences. Comparisons of species richness among different studies is confounded by differences in duration, seasonality, and the number of drift fences used in the studies. The relative abundance of a particular species cannot be compared with validity with that of another species because of interspecific differences in susceptibility to trapping and ability to escape from traps. A species' habits or habitat preferences partially determine its susceptibility to capture by drift fences. Those habitat preferences are provided in Appendix U. A species' habitat preferences may change depending upon the time of year and weather conditions. Only 1 or 2 of the most important habitat preferences are given for each species in Appendix U, although some species may utilize many habitats (e.g., the barking treefrog [*Hyla gratiosa*] may be arboreal, fossorial, refugia-dwelling, surfacoreal, and semiaquatic). The semiaquatic habits of breeding terrestrial amphibians are not included in the appendix, nor is the fossorial or refugia-dwelling habits of many aquatic species.

Habitat Inventory

The data form provided in Appendix V can be used to record the GPS location of the center of the array, fence lengths and compass bearings, and approximate distances to nearest water or other habitat. Vegetative data can be collected in the vicinity of each array using ocular estimation of percent cover in various layers. Overstory refers to trees ≥5 m tall, shrub layer to vegetation 1–5 m tall, and ground cover to plants <1 m high. The dominant plant species in each layer should be recorded. The presence of fallen logs, stumps, snags, exposed limerock, and burrows (especially gopher tortoise [*Gopherus polyphemus*]) might also be recorded. The water depth at the center of the array and the months that the array was flooded should be noted, as well as any site preparation practices, the approximate age of planted pines, the last date the site was burned, the fire regime, and the presence of fire lines or other disturbances.

DISCUSSION

Surveyed Areas or Habitats

Several drift-fence studies have provided considerable information on multiple habitats in the Panhandle (U.S. Fish and Wildlife Service 1980), northern Florida (Enge and Wood 1998), central Florida (Florida Game and Fresh Water Fish Comm. 1976; Joiner and Godwin 1992*a*,*b*,*c*,*d*,*e*), and southern Florida (Dalrymple 1988, Timmerman et al. 1994), but most other studies focused on only 1 or 2 habitats. Numerous drift-fence surveys have been conducted in flatwoods (U.S. Fish and Wildlife Service 1978, Labisky et al. 1983, White 1983, Enge and Marion 1986, Domingue O'Neill 1995, Palis and Jensen 1995), sandhill (U.S. Fish and Wildlife Service 1978, Campbell and Christman 1982*b*, Mushinsky 1985, Dodd and Charest 1988, Stout et al. 1988, Dodd 1992, Franz et al. 1995, Palis and Jensen 1995, Stout and Corey 1995, Delis et al. 1996), and scrub (Christman et al. 1979, Campbell and Christman 1982*b*, Christman 1988, Greenberg et al. 1994*b*, Mushinsky and McCoy 1995) habitats.

Drift-fence surveys have been conducted on GFC lands at Chinsegut Nature Center; Southern Glades Wildlife and Environmental Area; and Andrews, Apalachicola (U.S. Fish and Wildlife Service 1980, Labisky et al. 1983), Arbuckle (Christman 1988, Mushinsky and McCoy 1995), Big Bend (Enge and Wood 1998), Big Shoals, Chassahowitzka, Everglades Conservation Area, Jennings Forest, Joe Budd, Kicco, Robert Brent, Rotenberger, and Talquin WMAs.

Drift-fence surveys have also been conducted on the following DEP lands: St. Martin's Marsh Aquatic Preserve and William's Tract (Joiner and Godwin 1992*a*); Olustee Battlefield and Paynes Creek (Hingtgen 1994*d*, 1995*e*) state historic sites; San Felasco Hammock State Preserve; Delnor-Wiggins Pass (Hingtgen 1994*b*, 1995*b*) and Oscar Scherer (Hingtgen 1990, 1994*c*, 1995*d*) state recreation areas; and Big Talbot Island, Collier-Seminole (Hingtgen 1993, 1994*a*, 1995*a*), Econfina River, Fort Cooper (Hingtgen 1995*c*), Ft. George Island, Guana River, Highlands Hammock (Mushinsky and McCoy 1995), Jonathan Dickinson (Timmerman et al. 1994), Myakka River, Rainbow River (Joiner and Godwin 1992*e*), and Torreya (Means and Studenroth 1994) state parks.

Drift-fence surveys have been conducted on federal lands in Apalachicola (U.S. Fish and Wildlife Service 1980, Labisky et al. 1983), Osceola (U.S. Fish and Wildlife Service 1978), and Ocala (Florida Game and Fresh Water Fish Commission 1976, Christman et al. 1979, Greenberg et al. 1994*b*) national forests. Other federal lands that have been surveyed are St. Marks National Wildlife Refuge (NWR) (U.S. Fish and Wildlife Service 1980), Avon Park Bombing Range, Eglin Air Force Base (Palis and Jensen 1995), Everglades National Park (Dalrymple 1988), and Gulf Islands National Seashore.

Most drift-fence surveys have been conducted in the area from the Apalachicola River in the Panhandle easterly to Osceola National Forest in northern peninsular Florida. This area of greatest sampling intensity extends southward along the central ridge of the peninsula to Highlands County and along the Gulf Coast as far south as Hillsborough County (Fig. 5).

Areas or Habitats Needing Surveys

Drift-fence efforts have concentrated in certain areas of the state, leaving large areas inadequately surveyed. The Panhandle west of the Apalachicola River, the Atlantic Coast, the Gulf Coast south of Tampa, and the Florida Keys have been undersampled by systematic drift-fence surveys (Fig. 5). The Panhandle, particularly the Escambia River and the northern portion of the Apalachicola River Valley, has the highest cumulative biological scores for amphibian taxa with biological scores ≥24, the median score for species of special concern (Millsap et al. 1990). The Atlantic Coast has the highest cumulative biological scores for vulnerable reptile taxa (Millsap et al. 1990), yet drift-fence surveys apparently have only been conducted in Duval, St. Johns, and Martin counties, but the latter study did not sample coastal habitats (Timmerman et al. 1994). Limited drift-fence surveys of a few habitats in state parks and recreation areas have been conducted south of Tampa. The Florida Keys, which have never been surveyed using drift fences, contain 8 state-listed reptile taxa or populations that are potentially susceptible to capture by drift fences.

Few drift-fence surveys of wetland habitats in Florida were conducted prior to 1990 because of problems with installing fences in standing water, especially in unconsolidated substrates. With the advent of silt fencing, GFC biologists have begun sampling such habitats. Studies using funnel traps placed along silt fences have currently captured 21 anuran, 19 salamander, 1 crocodilian, 12 turtle, 11 lizard, and 32 snake species. Uncommon or secretive species captured using silt fencing include the four-toed salamander (*Hemidactylium*

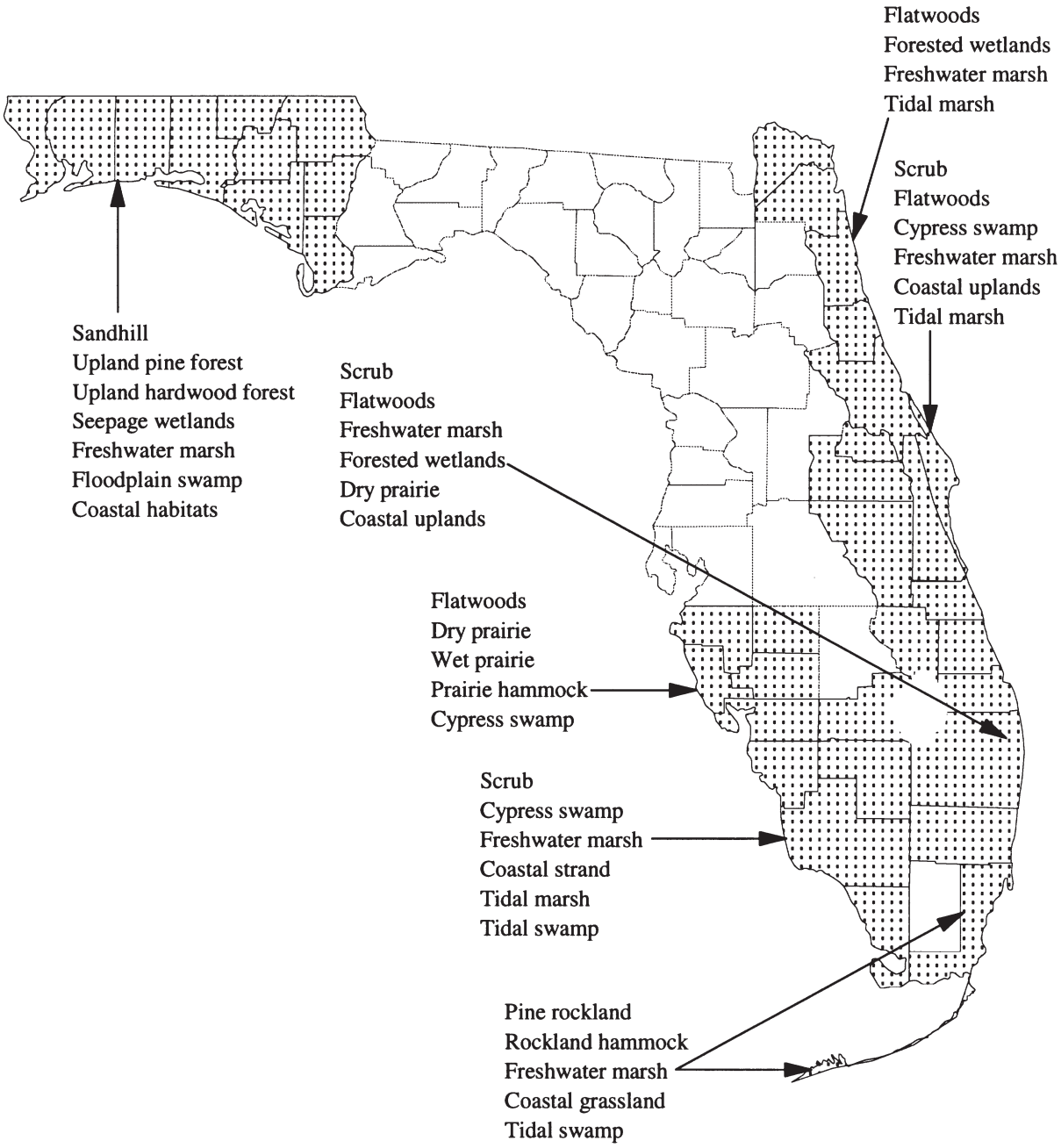

Fig. 5. Areas (shaded) and habitats in Florida that have been undersampled by drift-fence surveys.

scutatum), rusty mud salamander (*Pseudotriton montanus floridanus*), one-toed amphiuma (*Amphiuma pholeter*), eastern tiger salamander (*Ambystoma tigrinum tigrinum*), southern copperhead (*Agkistrodon contortrix contortrix*), and eastern indigo snake (*Drymarchon couperi*).

Relatively little is known about the herpetofaunal communities of beach dune, overwash plain, coastal strand, coastal scrub, maritime hammock, tidal marsh, tidal swamp, pine rockland, rockland hammock, seepage slope (especially west of the Apalachicola River), baygall, bog, floodplain swamp and forest, upland pine forest and sandhill in the western Panhandle, dry prairie, marl prairie, wet prairie, basin swamp, strand swamp, swale, and slough habitats. Limited published drift-fence data exist for dome swamp (Vickers et al. 1985), upland pine and upland hardwood forests (Means and Campbell 1981), upland hardwood or slope forest (Enge 1997*b*), upland mixed forest (Miller and Schaefer 1993), and bottomland forest (Means and Studenroth 1994).

Drift-fence surveys of coastal habitats could provide important information on biologically vulnerable taxa, such as the Cedar Key mole skink (*Eumeces egregius insularis*), Florida scrub lizard (*Sceloporus woodi*), coastal dunes crowned snake (*Tantilla relicta pamlica*), mangrove salt marsh snake (*Nerodia clarkii compressicauda*), and Atlantic salt marsh snake (*N. c. taeniata*). Coastal herpetofaunal surveys are needed statewide, but target areas should be southwestern Florida (Lee and Collier counties) and the Atlantic Coast from Volusia to Dade counties. Such surveys should target scrub, maritime hammock, coastal strand, coastal grassland, and tidal swamp habitats (Fig. 5). The only WMA along the Atlantic Coast is Guana River in St. Johns County. The DEP has numerous state parks and recreation areas along the coast, but high public use and small size make many of them unsuitable for extensive drift-fence surveys. The most obvious areas for drift-fence surveys are Merritt Island NWR and Canaveral National Seashore, where surveys may provide information on the coastal dunes crowned snake, South Florida mole kingsnake (*Lampropeltis calligaster occipitolineata*) (Layne et al. 1986, Price 1987), and Atlantic salt marsh snake.

Surveys have been conducted for certain amphibians (e.g., Pine Barrens treefrog [*Hyla andersonii*], Florida bog frog [*Rana okaloosae*] gopher frog, flatwoods salamander [*Ambystoma cingulatum*]) using seepage and ephemeral wetlands in the western Panhandle, but more general surveys of herpetofaunal communities are needed in the Escambia, Yellow, and Apalachicola river drainages to determine the distribution of rare taxa for development of management and conservation strategies on publicly owned lands (e.g., Apalachicola National Forest, Eglin Air Force Base, Blackwater River State Forest). Herpetofaunal surveys in these river drainages should target wet prairies and floodplain wetlands in their lower portions and slope forests, seepage slopes, and bogs along their tributaries. Surveys in the western Panhandle could help define the distribution of the dusky gopher frog (*Rana capito sevosa*), flatwoods salamander, four-toed salamander, seal salamander (*Desmognathus monticola*), spotted dusky salamander (*D. conanti*), one-toed amphiuma, southern coal skink (*Eumeces anthracinus pluvialis*), and southern copperhead. An undescribed species related to the dwarf salamander (*Eurycea quadridigitata*) has recently been discovered via drift-fence surveys in the western Panhandle, and additional surveys may document the presence of other species, most likely the spotted salamander (*Ambystoma maculatum*) and/or pickerel frog (*Rana palustris*). Upland habitats that should be surveyed are sandhill, upland pine forest, upland hardwood forest, and coastal communities (Fig. 5).

Additional herpetofaunal surveys are needed in dry prairies in south-central Florida, now 1 of Florida's most endangered natural landscapes (Noss et al. 1995). Other habitats needing surveys, especially north and west of Lake Okeechobee, are wet prairie, flatwoods, and prairie hammock (Fig. 5). Potential study areas in south-central Florida are Three Lakes WMA, the National Audubon Society's Ordway-Whittell Sanctuary, and the future Latt Maxcy Kissimmee Prairie State Preserve (Hedges 1996). Additional drift-fence studies need to be conducted south of Lake Okeechobee in marl prairie, wet prairie, strand swamp, swale (i.e., sawgrass [*Cladium jamaicense*] marsh) and slough habitats. Most of the wild-caught amphibian and reptiles for the commercial pet trade come from this area (Enge 1993), which is also being impacted by massive hydrologic changes, agricultural pollution, urbanization, and invasion by introduced nonnative plants and animals. Drift-fence studies could provide information on the impacts of habitat and hydrologic alteration on herpetofaunal communities in southern Florida. Possible study areas are the Arthur R. Marshall Loxahatchee NWR and Rotenberger, Holey Land, Brown's Farm, J. W. Corbett, and Everglades WMAs.

Habitats undersampled in southwestern Florida are tidal marsh and swamp, flatwoods, hydric hammock, strand and dome swamps, various freshwater marshes and prairies, coastal strand, and scrub (Fig. 5). Public lands needing drift-fence surveys are Cecil M. Webb WMA, Collier-Seminole State Park, Big Cypress National Preserve, Florida Panther NWR, and Big Cypress WMA.

Drift-fence surveys are especially needed in rockland habitats in Dade County parks and the Keys, but installation of fences there will be difficult because of pinnacle rock. Over 98% of the original pine rockland habitat outside of Everglades National Park has been cleared for agriculture and residential development (Snyder et al. 1990), and rockland hammock habitat has been highly fragmented (Bancroft et al. 1995). Another area that would benefit from drift-fence surveys is the Florida Keys. The distributions of many herpetofaunal taxa in the Keys are poorly known (Lazell 1989). Biologically vulnerable taxa there are the Florida Keys mole skink (*Eumeces egregius egregius*), Key ringneck snake (*Diadophis punctatus acricus*), mangrove salt marsh snake, and rim rock crowned snake (*Tantilla oolitica*). There are also state-listed populations of

the striped mud turtle (*Kinosternon baurii*), Florida brown snake (*Storeria dekayi victa*), corn snake (*Elaphe guttata*), and peninsula ribbon snake (*Thamnophis sauritus sackenii*) in the Lower Keys. All habitats need sampling in the Keys, especially rockland communities and freshwater wetlands. Studies are needed to determine the minimum size of patches of rockland habitat needed to support a complete suite of herpetofaunal species and to determine proper management practices and conservation strategies that would benefit the many rare herpetofaunal taxa and populations.

Impacts of certain land management practices on various taxa could be assessed by comparing relative numbers captured by drift fencing in comparable areas but subjected to different types or intensities of habitat alteration (e.g., clearcutting, selective logging, site preparation, pine planting, prescribed burning, stumping). Although drift-fence studies have been conducted in Florida on the effects of clearcutting scrub, sandhill, and flatwoods, and of converting longleaf pine (*Pinus palustris*) flatwoods to slash pine (*P. elliottii*) stands, no studies have been conducted on the effects of converting mesic uplands and forested wetlands to pine plantations. Drift fencing possibly could be used to study the impacts on herpetofaunal communities of pollution, pesticides, hurricane damage, wetland drainage or ditching, restoration of human-altered lands (e.g., phosphate mines, the Kissimmee River, the Everglades), land clearing for agriculture, habitat fragmentation, road construction, commercial harvest for the pet trade, rooting feral hogs and nine-banded armadillos (*Dasypus novemcinctus*), grazing cattle, competition and predation from nonnative anurans and lizards, fire ants, and invasion of natural habitats by nonnative vegetation, such as Brazilian pepper (*Schinus terebinthifolius*), Australian pine (*Casuarina* sp.), and melaleuca (*Melaleuca quinquenervia*). Some drift-fence surveys have been conducted in disturbed habitats dominated by Brazilian pepper in Everglades National Park (Dalrymple 1988) and in stands of melaleuca of different ages and stocking densities (G. H. Dalrymple, Florida International University, pers. commun.).

A concerted effort to conduct herpetofaunal surveys in undersampled habitats in key areas of the state would provide valuable information on the distribution, habitat associations, relative abundance, and activity patterns of many amphibian and reptile taxa. Species undersampled by drift fencing can often be detected using other methods (e.g., time-constrained searches, nocturnal road cruising, anuran auditory surveys, funnel trapping of gopher tortoise burrows, and aquatic turtle trapping or basking surveys). There should be coordination and cooperation between and within state and federal agencies regarding drift-fence methodology, areas surveyed, and data dissemination.

LITERATURE CITED

Anonymous. 1987. Guidelines for the use of live amphibians and reptiles in field research. Am. Soc. Ichthyol. and Herpetol., Herpetol. League, and Soc. Stud. Amphibians and Reptiles. 14pp.

Ashton, R. E., Jr., and P. S. Ashton. 1988. Handbook of reptiles and amphibians of Florida. Part 1: The snakes. Windward Publ., Miami, Fla. 176pp.

_____, and _____. 1991*a*. Handbook of reptiles and amphibians of Florida. Part 2: Lizards, turtles and crocodilians. Windward Publ., Miami, Fla. 191pp.

_____, and _____. 1991*b*. Handbook of reptiles and amphibians of Florida. Part 3: The amphibians. Windward Publ., Miami, Fla. 191pp.

Bancroft, G. T., A. M. Strong, and M. Carrington. 1995. Deforestation and its effects on forest-nesting birds in the Florida Keys. Conserv. Biol. 9:835–844.

Behler, J. L., and F. W. King. 1979. The Audubon Society field guide to North American reptiles and amphibians. Alfred A. Knopf, New York, N.Y. 719pp.

Brown, L. N. 1994. A checklist of Florida's mammals. Florida Game and Fresh Water Fish Comm., Tallahassee. 8pp.

_____. 1997. Mammals of Florida. Windward Publ., Miami, Fla. 224pp.

Burke, V. J., and J. W. Gibbons. 1995. Terrestrial buffer zones and wetland conservation: a case study of freshwater turtles in a Carolina bay. Conserv. Biol. 9:1365–1369.

Bury, R. B., and P. S. Corn. 1987. Evaluation of pitfall trapping in northwestern forests: trap arrays with drift fences. J. Wildl. Manage. 51:112–119.

Campbell, H. W., and S. P. Christman. 1982*a*. Field techniques for herpetofaunal community analysis. Pages 193–200 *in* N. J. Scott, Jr., ed. Herpetological communities. U.S. Fish and Wildl. Serv., Wildl. Res. Rep. No. 13.

_____, and _____. 1982*b*. The herpetofaunal components of Florida sandhill and sand pine scrub associations. Pages 163–171 *in* N. J. Scott, Jr., ed. Herpetological communities. U.S. Fish and Wildl. Serv., Wildl. Res. Rep. No. 13.

Carmichael, P., and W. Williams. 1991. Florida's fabulous reptiles and amphibians. World Publ., Tampa, Fla. 120pp.

Christman, S. P. 1988. Endemism in Florida's interior sand pine scrub. Florida Game and Fresh Water Fish Comm. Final Rep., Tallahassee. 246pp.

_____, H. I. Kochman, H. W. Campbell, C. R. Smith, and W. S. Lippincott, Jr. 1979. Successional changes in community structures: amphibians and reptiles in Florida sand pine scrub. (Unpubl. manuscr.) U.S. Fish and Wildl. Serv., Natl. Fish and Wildl. Lab., Gainesville, Fla. 21pp.

Collins, J. T. 1997. Standard common and current scientific names for North American amphibians and reptiles. Fourth ed. Soc. Stud. Amphibians and Reptiles Herpetol. Circ. No. 25. 40pp.

Conant, R., and J. T. Collins. 1991. A field guide to amphibians and reptiles of eastern and central North America. Third ed. Houghton Mifflin Co., Boston, Mass. 450pp.

Corn, P. S. 1994. Straight-line drift fences and pitfall traps. Pages 109–117 *in* W. R. Heyer, M. A. Donnelly, R. W. McDiarmid, L. C. Hayek, and M. S. Foster, eds. Measuring and monitoring biological diversity: standard methods for amphibians. Smithsonian Inst. Press, Washington, D.C.

_____, and R. B. Bury. 1990. Sampling methods for terrestrial amphibians and reptiles. U.S. Dep. Agric., For. Serv. Gen. Tech. Rep. PNW-GTR-256. 34pp.

Dalrymple, G. H. 1988. The herpetofauna of Long Pine Key, Everglades National Park, in relation to vegetation and hydrology. Pages 72–86 *in* R. C. Szaro, K. E. Severson, and D. R. Patton, tech. coords. Proc. symposium management of amphibians, reptiles, and small mammals in North America. U.S. For. Serv. Gen. Tech. Rep. RM-166.

Delis, P. R., H. R. Mushinsky, and E. D. McCoy. 1996. Decline of some west-central Florida anuran populations in response to habitat degradation. Biodiversity and Conserv. 5:1579–1595.

Dodd, C. K., Jr. 1991. Drift fence-associated sampling bias of amphibians at a Florida sandhills temporary pond. J. Herpetol. 25:296–301.

_____. 1992. Biological diversity of a temporary pond herpetofauna in North Florida sandhills. Biodiversity and Conserv. 1:125–142.

_____. 1993*a*. Cost of living in an unpredictable environment: the ecology of striped newts *Notophthalmus perstriatus* during a prolonged drought. Copeia 1993:605–614.

_____. 1993*b*. Population structure, body mass, activity, and orientation of an aquatic snake (*Seminatrix pygaea*) during a drought. Can. J. Zool. 71:1281–1288.

_____. 1994. The effects of drought on population structure, activity, and orientation of toads (*Bufo quercicus* and *B. terrestris*) at a temporary pond. Ethol. Ecol. & Evol. 6:331–349.

_____. 1995. The ecology of a sandhills population of the eastern narrow-mouthed toad, *Gastrophryne carolinensis*, during a drought. Bull. Florida Mus. Nat. Hist. 38, Pt. I(1):11–41.

_____, and B. G. Charest. 1988. The herpetofaunal community of temporary ponds in north Florida sandhills: species composition, temporal use, and management implications. Pages 87–97 *in* R. C. Szaro, K. E. Severson, and D. R. Patton, tech. coords. Proc. symposium management of amphibians, reptiles, and small mammals in North America. U.S. For. Serv. Gen. Tech. Rep. RM-166.

_____, and R. Franz. 1995. Seasonal abundance and habitat use of selected snakes trapped in xeric and mesic communities of north-central Florida. Bull. Florida Mus. Nat. Hist. 38, Pt. I(2):43–67.

_____, and D. E. Scott. 1994. Drift fences encircling breeding sites. Pages 125–130 *in* W. R. Heyer, M. A. Donnelly, R. W. McDiarmid, L. C. Hayek, and M. S. Foster, eds. Measuring and monitoring biological diversity: standard methods for amphibians. Smithsonian Inst. Press, Washington, D.C.

Domingue O'Neill, E. 1995. Amphibian and reptile communities of temporary ponds in a managed pine flatwood. M.S. Thesis, Univ. Florida, Gainesville. 106pp.

Enge, K. M. 1993. Herptile use and trade in Florida. Florida Game and Fresh Water Fish Comm. Final Perf. Rep., Tallahassee. 102pp + iii.

_____. 1997*a*. Habitat occurrence of Florida's native amphibians and reptiles. Tech. Rep. No. 16. Florida Game and Fresh Water Fish Comm., Tallahassee. In Press.

_____. 1997*b*. Herpetofaunal drift-fence survey of an upland hardwood forest, Gadsden County, Florida. Florida Game and Fresh Water Fish Comm. Final Perf. Rep., Tallahassee. In Press.

_____. 1997*c*. Use of silt fencing and funnel traps for drift fencing. Herpetol. Rev. 28:30–31.

_____, and W. R. Marion. 1986. Effects of clearcutting and site preparation on herpetofauna of a North Florida flatwoods. For. Ecol. and Manage. 12:177–192.

_____, and K. N. Wood. 1998. Herpetofaunal surveys of the Big Bend Wildlife Management Area, Taylor County, Florida. Florida Sci. 61:In press.

Ferner, J. W. 1979. A review of marking techniques for amphibians and reptiles. Soc. Stud. Amphibians and Reptiles Herpetol. Circ. No. 9. 41pp.

Florida Game and Fresh Water Fish Commission. 1976. Cross Florida barge canal restudy report: wildlife study. Vol. 1. Appendix B: herpetology study. Dep. Army Corps Eng., Jacksonville, Fla. 217pp.

Florida Natural Areas Inventory. 1990. Guide to the natural communities of Florida. Florida Dep. Nat. Resour., Tallahassee. 111pp.

Franz, R., R. E. Ashton, and W. W. Timmerman. 1995. Behavior and movements of certain small sandhill amphibians and reptiles in response to drift fences. Florida Game and Fresh Water Fish Comm. Proj. Rep., Tallahassee. 92pp + x.

Gibbons, J. W. 1990. Turtle studies at SREL: a research perspective. Pages 19-44 *in* J. W. Gibbons, ed. Life history and ecology of the slider turtle. Smithsonian Inst. Press, Washington, D.C.

_____, and R. D. Semlitsch. 1982. Terrestrial drift fences with pitfall traps: an effective technique for quantitative sampling of animal populations. Brimleyana No. 7:1–16.

_____, J. L. Greene, and J. D. Congdon. 1983. Drought-related responses of aquatic turtle populations. J. Herpetol. 17:242–246.

_____, _____, and _____. 1990. Temporal and spatial movement patterns of sliders and other turtles. Pages 201–215 *in* J. W. Gibbons, ed. Life history and ecology of the slider turtle. Smithsonian Inst. Press, Washington, D.C.

Grant, B. W., A. D. Tucker, J. E. Lovich, A. M. Mills, P. M. Dixon, and J. W. Gibbons. 1992. The use of coverboards in estimating patterns of reptile and amphibian biodiversity. Pages 379–403 *in* D. R. McCullough and R. H. Barrett, eds. Wildlife 2001: populations. Elsevier Appl. Sci., London.

Greenberg, C. H. 1993. Effect of high-intensity wildfire and silvicultural treatments on biotic communities of sand pine scrub. Ph.D. Thesis, Univ. Florida, Gainesville. 185pp.

_____, D. G. Neary, and L. D. Harris. 1994*a*. A comparison of herpetofaunal sampling effectiveness of pitfall, single-ended, and double-ended funnel traps used with drift fences. J. Herpetol. 28:319–324.

_____, _____, and _____. 1994*b*. Effect of high-intensity wildfire and silvicultural treatments on reptile communities in sand-pine scrub. Conserv. Biol. 8:1047–1057.

Hedges, S. 1996. Landmark acquisition to save 47,000 acres of dry prairie habitat. The Nat. Conserv. Florida Chapter News (Summer):1–2.

Hingtgen, T. 1990. Oscar Scherer State Recreation Area vertebrate field survey. Florida Park Serv. Annu. Rep. (unpubl.), District 8 Res. 11pp.

_____. 1993. Collier-Seminole State Park vertebrate field survey, CSSP-4-D. Florida Park Serv. Annu. Rep. (unpubl.), District 5 Res. 9pp.

_____. 1994*a*. Collier-Seminole State Park vertebrate field survey, CSSP-4-D. Florida Park Serv. Annu. Rep. (unpubl.), District 4 Res. 10pp.

_____. 1994*b*. Delnor-Wiggins Pass State Recreation Area vertebrate field survey, WPSRA-2-D. Florida Park Serv. Annu. Rep. (unpubl.), District 4 Res. 9pp.

_____. 1994*c*. Oscar Scherer State Park and addition vertebrate field survey, OSSRA-4-D and OSSRA-8-D. Florida Park Serv. Annu. Rep. (unpubl.), District 4 Res. 18pp.

_____. 1994*d*. Paynes Creek State Historic Site vertebrate field survey, PCSHS-1-D. Florida Park Serv. Annu. Rep. (unpubl.), District 4 Res. 12pp.

_____. 1995*a*. Collier-Seminole State Park vertebrate field survey, CSSP-4-D. Florida Park Serv. Annu. Rep. (unpubl.), District 4 Res. 11pp.

_____. 1995*b*. Delnor-Wiggins Pass State Recreation Area vertebrate field survey, WPSRA-2-D. Florida Park Serv. Annu. Rep. (unpubl.), District 4 Res. 9pp.

_____. 1995*c*. Fort Cooper State Park vertebrate field survey, FCSP-2-D. Florida Park Serv. Annu. Rep. (unpubl.), District 4 Res. 22pp.

_____. 1995*d*. Oscar Scherer State Park and addition vertebrate field survey, OSSRA-4-D and OSSRA-8-D. Florida Park Serv. Annu. Rep. (unpubl.), District 4 Res. 19pp.

_____. 1995*e*. Paynes Creek State Historic Site vertebrate field survey, PCSHS-1-D. Florida Park Serv. Annu. Rep. (unpubl.), District 4 Res. 12pp.

Joiner, N. D., and J. Godwin. 1992*a*. Aquatic and terrestrial wildlife surveys for the Crystal River watershed. Fourth quarterly report (unpubl.). Florida Game and Fresh Water Fish Comm. Prepared for SWIM Dep., Southwest Florida Water Manage. Dist., Contract No. 89093. 48pp.

_____, and _____. 1992*b*. Aquatic and terrestrial wildlife surveys for the Lake Panasoffkee watershed. Fourth quarterly report (unpubl.). Florida Game and Fresh Water Fish Comm. Prepared for SWIM Dep., Southwest Florida Water Manage. Dist., Contract No. 89093. 53pp.

_____, and _____. 1992*c*. Aquatic and terrestrial wildlife surveys for the Lake Tarpon watershed. Fourth quarterly report (unpubl.). Florida Game and Fresh Water Fish Comm. Prepared for SWIM Dep., Southwest Florida Water Manage. Dist., Contract No. 89093. 46pp.

_____, and _____. 1992*d*. Aquatic and terrestrial wildlife surveys for the Lake Thonotosassa watershed. Fourth quarterly report (unpubl.). Florida Game and Fresh Water Fish Comm. Prepared for SWIM Dep., Southwest Florida Water Manage. Dist., Contract No. 89093. 52pp.

_____, and _____. 1992*e*. Aquatic and terrestrial wildlife surveys for the Rainbow River watershed. Fourth quarterly report (unpubl.). Florida Game and Fresh Water Fish Comm. Prepared for SWIM Dep., Southwest Florida Water Manage. Dist., Contract No. 89093. 47pp.

Jones, K. B. 1986. Amphibians and reptiles. Pages 267-290 *in* A. Y. Cooperrider, R. J. Boyd, and H. R. Stuart, eds. Inventory and monitoring of wildlife habitat. U.S. Dep. Inter., Bur. Land Manage. Serv. Cent., Denver, Colo.

Karns, D. R. 1986. Field herpetology: methods for the study of amphibians and reptiles in Minnesota. James Ford Bell Mus. Nat. Hist., Univ. Minnesota, Minneapolis. 88pp.

Klauber, L. M. 1939. Studies of reptile life in the arid Southwest. Part 1: Night collecting on the desert with ecological statistics. Bull. Zool. Soc. San Diego 14:7–64.

Labisky, R. F., J. A. Hovis, R. W. Repenning, and D. J. White. 1983. Wildlife inventory on the Apalachicola National Forest. Final report. U.S. For. Serv. Coop. Agreement No. 19-340. 171pp.

Layne, J. N., T. J. Walsh, and P. Meylan. 1986. New records for the mole snake, *Lampropeltis calligaster*, in peninsular Florida. Florida Sci. 49:171–175.

Lazell, J. D. Jr. 1989. Wildlife of the Florida Keys: a natural history. Island Press, Covelo, Calif. 254pp.

Means, D. B., and H. W. Campbell. 1981. Effects of prescribed burning on amphibians and reptiles. Pages 89–96 *in* G. W. Wood, ed. Prescribed fire and wildlife in southern forests. Belle W. Baruch For. Sci. Inst., Clemson Univ., Georgetown, S.C.

_____, and D. Simberloff. 1987. The peninsula effect: habitat-correlated species declines in Florida's herpetofauna. J. Biogeogr. 14:551– 568.

_____, and K. R. Studenroth, Jr. 1994. Amphibians and reptiles of Torreya State Park (with special emphasis on the Rock Creek Tract). Rep. to Torreya State Park, Marianna, Fla. 69pp.

Miller, S. H., and J. M. Schaefer. 1993. Hardwood hammock fragments: relationships between human population growth and wildlife species richness. Florida Game and Fresh Water Fish Comm. Final Proj. Rep., Tallahassee. 51pp.

Millsap, B. A., J. A. Gore, D. E. Runde, and S. I. Cerulean. 1990. Setting priorities for the conservation of fish and wildlife species in Florida. Wildl. Monogr. No. 111. 57pp.

Moler, P. 1990. A checklist of Florida's amphibians and reptiles. Florida Game and Fresh Water Fish Comm. Tallahassee. 18pp.

Moulton, C. A., W. J. Fleming, and B. R. Nerney. 1996. The use of PVC pipes to capture hylid frogs. Herpetol. Rev. 27:186–187.

Murphy, C. G. 1993. A modified drift fence for capturing treefrogs. Herpetol. Rev. 24:143–145.

Mushinsky, H. R. 1985. Fire and the Florida sandhill herpetofaunal community: with special attention to responses of *Cnemidophorus sexlineatus*. Herpetologica 41:333–342.

_____, and E. D. McCoy. 1995. Vertebrate species composition of selected scrub islands on the Lake Wales Ridge of central Florida. Florida Game and Fresh Water Fish Comm. Proj. Rep., Tallahassee. 325pp.

Noss, R. F., E. T. LaRoe III, and J. M. Scott. 1995. Endangered ecosystems of the United States: a preliminary assessment of loss and degradation. U.S. Dep. Inter. Natl. Biol. Serv. Biol. Rep. 28. 58pp.

Palis, J. G., and J. B. Jensen. 1995. Distribution and breeding biology of the flatwoods salamander (*Ambystoma cingulatum*) and gopher frog (*Rana capito*) on Eglin Air Force Base, Florida. Final report. Florida Nat. Areas Inventory, Tallahassee. 32pp. + x.

Pechmann, J. H. K., D. E. Scott, J. W. Gibbons, and R. D. Semlitsch. 1989. Influence of wetland hydroperiod on diversity and abundance of metamorphosing juvenile amphibians. Wetlands Ecol. Manage. 1:3–11.

Phelps, J. P., and R. A. Lancia. 1995. Effects of a clearcut on the herpetofauna of a South Carolina bottomland swamp. Brimleyana No. 22:31–45.

Pisani, G. R. 1973. A guide to preservation techniques for amphibians and reptiles. Soc. Stud. Amphibians and Reptiles Herpetol. Circ. No. 1. 22pp.

Price, R. 1987. Disjunct occurrence of mole snakes in peninsular Florida, and the description of a new subspecies of *Lampropeltis calligaster*. Bull. Chicago Herpetol. Soc. 22:148.

SAS Institute. 1988. SAS/STAT™ User's Guide, Release 6.03 Edition. SAS Institute, Inc., Cary, North Carolina. 1,028 pp.

Seigel, R. A., J. W. Gibbons, and T. K. Lynch. 1995. Temporal changes in reptile populations: effects of a severe drought on aquatic snakes. Herpetologica 51:424–434.

Semlitsch, R. D., D. E. Scott, and J. H. K. Pechmann. 1993. Phenotypic variation in the arrival time of breeding salamanders: individual repeatability and environmental influences. J. Anim. Ecol. 62:334–340.

Sekerak, C. M. 1994. Vegetation and aquatic vertebrate and macroinvertebrate assemblages in flatwoods salamander breeding ponds in the Apalachicola National Forest. M.S. Thesis, Univ. Florida, Gainesville. 74pp.

Shields, M. A. 1985. Selective use of pitfall traps by southern leopard frogs. Herpetol. Rev. 16:14.

Snyder, J. R., A. Herndon, and W. B. Robertson, Jr. 1990. South Florida rockland. Pages 230–277 *in* R. L. Myers and J. J. Ewel, eds. Ecosystems of Florida. Univ. Cent. Florida Press, Orlando.

Stout, I. J., and D. T. Corey. 1995. Effects of patch-corridor configurations on non-game birds, mammals, and herptiles in longleaf pine-turkey oak sandhill communities. Florida Game and Fresh Water Fish Comm. Proj. Rep., Tallahassee. 259pp. + viii.

_____, D. R. Richardson, and R. E. Roberts. 1988. Management of amphibians, reptiles, and small mammals in xeric pinelands of peninsular Florida. Pages 98–108 *in* R. C. Szaro, K. E. Severson, and D. R. Patton, tech. coords. Proc. symposium management amphibians, reptiles, and small mammals in North America. U.S. For. Serv. Gen. Tech. Rep. RM-166.

Studenroth, K. R., Jr. 1992. A contribution to the herpetology of the Florida Panhandle. (Unpubl. manuscr.) 13pp.

Timmerman, W. W., J. B. Miller, and C. V. Tamborski. 1994. The herpetofauna of Jonathan Dickinson State Park, Martin County, Florida. Florida Dep. Environ. Prot., Div. Recreation and Parks, Hobe Sound. Final Rep. Project No. 7618. 38pp.

U.S. Fish and Wildlife Service. 1978. Osceola National Forest phosphate extraction and processing: impacts on federally listed threatened or endangered and other species of concern. Natl. Fish and Wildl. Lab., Gainesville, Fla. 119pp.

_____. 1980. St. Marks National Wildlife Refuge: forestry management and non-game wildlife. Final report. U.S. Fish and Wildl. Serv., Natl. Fish and Wildl. Lab., Gainesville, Fla. 163pp.

Vickers, C. R., L. D. Harris, and B. F. Swindel. 1985. Changes in herpetofauna resulting from ditching of cypress ponds in coastal plains flatwoods. For. Ecol. Manage. 11:17–29.

Vogt, R. C., and R. L. Hine. 1982. Evaluation of techniques for assessment of amphibian and reptile populations in Wisconsin. Pages 201–217 *in* N. J. Scott, Jr., ed. Herpetological communities. U.S. Fish and Wildl. Serv., Wildl. Res. Rep. No. 13.

White, D. J. 1983. The herpetofaunal community of an abrupt forest edge in North Florida. M.S. Thesis, Univ. Florida, Gainesville. 37pp.

Appendix A. Herpetofaunal drift-fence data from flatwoods sites in the Florida Panhandle (X denotes a species observed but not captured by drift fences).

Species	Wet flatwoods[a]	Mesic flatwoods[b]	Mesic flatwoods[c]	Mesic flatwoods[d]	Mesic flatwoods[e]
Salamanders					
Flatwoods salamander	89	3	5	0	0
Mole salamander	0	0	2	5	24
Two-toed amphiuma	3	0	0	0	0
One-toed amphiuma	1	0	0	0	0
Dwarf salamander	40	10	11	0	18
Four-toed salamander	0	0	0	1	0
Eastern newt	54	0	0	4	58
Southeastern slimy salamander	0	8	2	0	0
Northern dwarf siren	15	0	0	0	0
Eastern lesser siren	58	0	0	0	0
Anurans					
Southern cricket frog	1	2	2	7	3
Oak toad	1	6	0	0	21
Southern toad	13	5	12	36	4
Eastern narrowmouth toad	58	15	8	82	8
Green treefrog	2	0	0	2	0
Pinewoods treefrog	1	0	0	30	3
Squirrel treefrog	1	0	0	0	0
Southern chorus frog	0	0	1	0	1
Little grass frog	0	0	2	1	1
Ornate chorus frog	0	2	3	6	35
Bullfrog	1	0	0	0	0
Pig frog	1	0	0	0	0
Florida leopard frog	40	15	3	11	56
Eastern spadefoot	0	0	0	4	0
Unidentified anuran	0	0	0	3	0
No. amphibians	379	66	51	192	232
No. amphibian species	17	9	11	12	12
No. amphibian/array-day	0.408	0.036	0.028	0.093	0.146
No. amphibians/km-day	13.43	1.18	0.91	3.51	4.81
Turtles					
Eastern mud turtle	10	4	0	0	5
Eastern box turtle	3	3	2	5	6
Lizards					
Green anole	3	9	24	10	4
Six-lined racerunner	0	47	23	20	19
Mole skink	0	0	0	0	7
Five-lined skink	0	1	0	6	0
Southeastern five-lined skink	22	7	3	39	10
Broadhead skink	12	16	8	39	9
Eastern slender glass lizard	0	5	0	0	4
Island glass lizard	0	0	0	0	1
Eastern glass lizard	0	4	8	3	10
Southern fence lizard	0	6	4	15	4
Ground skink	28	103	139	5	74
Snakes					
Cottonmouth	2	0	0	0	0
Scarlet snake	2	32	4	14	49
Racer	2	20	29	22	22
Ringneck snake	14	2	1	2	3
Corn snake	3	5	1	1	2
Eastern mud snake	5	0	0	0	1
Eastern hognose snake	0	1	0	2	0
Southern hognose snake	0	1	0	0	0
Common kingsnake	6	0	0	0	0
Scarlet kingsnake	2	1	2	1	3
Eastern coachwhip	0	3	1	1	0
Eastern coral snake	0	7	5	1	0
Southern water snake	7	0	0	0	0
Brown water snake	0	0	0	0	1

Appendix A. Continued.

Species	Wet flatwoods[a]	Mesic flatwoods[b]	Mesic flatwoods[c]	Mesic flatwoods[d]	Mesic flatwoods[e]
Snakes (continued)					
Florida pine snake	0	1	0	1	0
Striped crayfish snake	2	0	0	0	0
Glossy crayfish snake	5	2	1	0	3
Black swamp snake	19	0	0	0	0
Dusky pigmy rattlesnake	2	7	6	14	9
Brown snake	7	0	1	0	0
Eastern ribbon snake	46	4	11	1	6
Common garter snake	2	6	4	2	1
Eastern earth snake	0	15	20	5	6
Unidentified snake	0	0	0	1	0
No. reptiles	204	312	297	210	259
No. reptile species	22	26	21	22	24
No. reptiles/array-day	0.220	0.170	0.161	0.102	0.163
No. reptiles/km-day	7.23	5.58	5.31	3.84	5.37
No. amphibians and reptiles	583	378	348	402	491
No. animals/array-day	0.628	0.205	0.189	0.196	0.310
No. animals/km-day	20.67	6.76	6.22	7.35	10.18
No. days	232	230	230	514	396.5
No. array-days	928	1,840	1,840	2,056	1,586
Total fence length (m)	121.6	243.2	243.2	106.4	121.6

[a] Four 4-fence arrays, with 8 funnel traps and 8 pitfall traps each, trapping in wet flatwoods with 40- to 50-year-old slash pines in St. Marks NWR, Wakulla Co., 12/05/78–7/25/79 (U.S. Fish and Wildlife Service 1980)

[b] Eight 4-fence arrays, with 8 funnel traps each, trapping in mesic flatwoods with 54- to 109-year-old longleaf pines in Apalachicola National Forest, Liberty Co., 3/13/80–5/15/80, 9/03/80–11/01/80, 3/29/81–5/20/81, and 9/04/81–10/30/81 (Labisky et al. 1983)

[c] Eight 4-fence arrays, with 8 funnel traps each, trapping in mesic flatwoods with 10- to 24-year-old slash pines in Apalachicola National Forest, Liberty Co., 3/13/80–5/15/80, 9/03/80–11/01/80, 3/29/81–5/20/81, and 9/04/81–10/30/81 (Labisky et al. 1983)

[d] Two 4-fence arrays, with 8 funnel traps and 8 pitfall traps each, and 2 3-fence arrays, with 6 funnel traps and 4 pitfall traps each, trapping in mesic flatwoods with 50-year-old longleaf pines in Joe Budd WMA, Gadsden Co., 2/02/89–6/26/89 and 10/18/89–10/23/90 (K. Enge and D. Runde, unpubl. data)

[e] Two 4-fence arrays, with 8 funnel traps and 8 pitfall traps each, trapping in mesic flatwoods with 70-year-old longleaf pines, 11/29/78–7/09/79 and 2 4-fence arrays, with 8 funnel traps and 8 pitfall traps each, trapping in mesic flatwoods with 100-year-old longleaf pines in St. Marks NWR, Wakulla Co., 12/15/77–7/09/79 (U.S. Fish and Wildlife Service 1980)

Appendix B. Herpetofaunal drift-fence data from wet and mesic flatwoods sites in northern peninsular Florida (X denotes a species observed but not captured by drift fences).

Species	Wet flatwoods[a]	Wet flatwoods[b]	Wet flatwoods[c]	Mesic flatwoods[d]	Mesic flatwoods[e]	Mesic flatwoods[f]	Mesic flatwoods[g]	Mesic flatwoods[h]
Salamanders								
Flatwoods salamander	3	0	0	0	0	0	0	0
Two-toed amphiuma	0	4	0	0	0	0	0	0
One-toed amphiuma	0	0	0	1	0	0	0	0
Dwarf salamander	30	4	1	0	0	0	0	0
Eastern newt	2	0	0	1	0	0	0	0
Southeastern slimy salamander	0	0	0	0	0	0	1	0
Eastern mud salamander	0	1	0	0	0	0	0	0
Eastern lesser siren	0	1	0	0	0	0	0	0
Anurans								
Southern cricket frog	3	2	10	13	0	0	0	1
Oak toad	37	1	29	10	0	1	6	2
Southern toad	243	66	96	14	11	5	12	1
Eastern narrowmouth toad	976	551	139	38	10	1	74	1
Green treefrog	12	0	0	0	0	1	0	0
Pinewoods treefrog	33	5	10	5	1	4	10	1
Barking treefrog	2	2	0	2	0	0	0	0
Squirrel treefrog	8	0	2	11	1	0	0	0
Southern chorus frog	0	1	9	3	0	0	3	0
Little grass frog	5	1	1	10	0	1	0	0
Ornate chorus frog	12	0	1	0	0	0	0	1
Bullfrog	0	0	0	0	0	1	0	0
Pig frog	0	1	0	0	0	0	0	0
River frog	0	0	0	0	0	1	0	0
Florida leopard frog	188	919	988	107	2	4	2	0
Eastern spadefoot	0	4,696	26	15	4	0	12	1
Unidentified anuran	0	11	38	6	2	0	0	1
No. amphibians	1,554	6,266	1,350	236	31	19	120	9
No. amphibian species	14	15	12	13	6	9	8	7
No. amphibians/array-day	0.873	3.858	0.416	0.514	0.071	0.018	0.054	0.049
No. amphibians/km-day	28.72	126.92	13.67	22.55	3.12	0.59	0.88	2.15
Turtles								
Gopher tortoise	0	0	0	0	0	1	2	0
Striped mud turtle	11	4	4	2	0	0	0	0
Eastern mud turtle	0	2	0	2	0	0	0	0
Eastern box turtle	11	X	0	0	0	0	0	0
Lizards								
Green anole	11	11	1	0	3	4	15	0
Six-lined racerunner	0	3	12	3	5	7	87	1
Five-lined skink	0	1	0	0	0	0	0	1
Southeastern five-lined skink	0	45	5	1	0	8	45	2
Broadhead skink	0	33	0	5	2	2	0	1
Eastern slender glass lizard	0	0	0	0	0	0	6	0
Island glass lizard	0	0	0	0	0	1	4	0
Eastern glass lizard	0	10	30	3	4	6	4	1
Southern fence lizard	0	0	0	4	14	0	5	0
Ground skink	233	38	29	0	1	44	24	14
Unidentified skink (*Eumeces* sp.)	0	0	0	0	0	0	0	4
Unidentified lizard	0	0	1	0	0	0	0	0
Snakes								
Cottonmouth	0	X	1	0	0	0	0	0
Scarlet snake	10	15	37	9	6	15	25	2
Racer	23	24	73	6	1	11	26	X
Eastern diamondback rattlesnake	0	0	0	1	0	0	0	0
Timber rattlesnake	0	0	1	0	0	0	1	0
Ringneck snake	21	5	20	0	0	2	0	0
Corn snake	1	3	8	0	1	0	1	0
Rat snake	0	0	0	0	2	1	0	0
Eastern mud snake	0	2	1	0	0	0	1	0
Eastern hognose snake	0	0	10	0	0	0	1	0
Scarlet kingsnake	3	2	2	0	0	2	0	0

Appendix B. Continued.

Species	Wet flatwoods[a]	Wet flatwoods[b]	Wet flatwoods[c]	Mesic flatwoods[d]	Mesic flatwoods[e]	Mesic flatwoods[f]	Mesic flatwoods[g]	Mesic flatwoods[h]
Snakes (continued)								
Eastern coral snake	0	0	0	0	0	0	2	0
Rough green snake	0	3	0	0	0	0	0	0
Florida pine snake	0	0	0	0	1	0	0	0
Glossy crayfish snake	0	1	5	0	0	2	0	0
Pine woods snake	0	5	0	0	0	3	0	0
Black swamp snake	0	0	4	1	0	0	0	0
Dusky pigmy rattlesnake	2	0	0	6	1	4	1	1
Florida redbelly snake	2	0	0	1	0	2	1	0
Eastern ribbon snake	4	9	3	2	0	3	0	0
Common garter snake	10	11	25	2	0	4	5	0
Rough earth snake	1	1	8	0	0	0	0	0
Unidentified snake	0	0	1	0	0	0	0	0
No. reptiles	343	228	281	48	41	122	256	27
No. reptile species	14	21	20	15	12	19	19	8
No. reptiles/array-day	0.193	0.140	0.087	0.105	0.094	0.115	0.114	0.147
No. reptiles/km-day	6.34	4.62	2.85	4.59	4.12	3.79	1.88	6.44
No. amphibians and reptiles	1,897	6,494	1,631	284	72	141	376	36
No. animals/array-day	1.066	3.999	0.502	0.619	0.165	0.133	0.168	0.196
No. animals/km-day	35.06	131.54	16.52	27.14	7.24	4.38	2.77	8.58
No. days	89	406	406	153	218	265	559	92
No. array-days	1,780	1,624	3,248	459	436	1,060	2,236	184
Total fence length (m)	608.0	121.6	243.2	68.4	45.6	121.6	243.2	45.6

[a] Eight 4-fence arrays, with 16 funnel traps each, trapping in wet flatwoods with mature slash pines, 8 arrays trapping in a pasture, and 4 arrays trapping along the forest/pasture edge, at a site E of Baldwin, Duval Co., 11/15/81–12/15/81, 2/15/82–3/15/82, and 5/15/82–6/15/82 (White 1983)

[b] Four 4-fence arrays, with 16 funnel traps each, trapping in wet flatwoods with 40-year-old slash pines 7 km W of Starke, Bradford Co., 8/21/81–9/18/81 and 10/16/81–10/29/82 (Enge and Marion 1986)

[c] Eight 4-fence arrays, with 16 funnel traps each, trapping in wet flatwoods with planted 2- to 3-year-old slash pines 7 km W of Starke, Bradford Co., 8/21/81–9/18/81 and 10/16/81–10/29/82 (Enge and Marion 1986)

[d] Three 3-fence arrays, with 9 funnel traps and 1 pitfall trap each, trapping in mesic flatwoods with planted 12-year-old slash pines in Spring Creek Unit, Big Bend WMA, Taylor Co., 5/29/92–10/29/92 (Enge and Wood 1998)

[e] Two 3-fence arrays, with 9 funnel traps and 1 pitfall trap each, trapping in mesic flatwoods with planted 28-year-old slash pines in Tide Swamp Unit, Big Bend WMA, Taylor Co., 3/25/93–10/29/93 (Enge and Wood 1998)

[f] Four 4-fence arrays, with 12 funnel traps and 4 pitfall traps each, trapping in mesic flatwoods with longleaf pines in Osceola National Forest, Baker Co., 10/28/76–7/20/77 (U.S. Fish and Wildlife Service 1978)

[g] Two 4-fence arrays, with 8 funnel traps and 8 pitfall traps each, and 2 3-fence arrays, with 6 funnel traps and 4 pitfall traps each, trapping in mesic flatwoods with mature longleaf pines in Olustee Battlefield State Historic Site, Baker Co., 12/05/88–6/17/90 (K. Enge and P. Southall, unpubl. data)

[h] Two 3-fence arrays of silt fencing, with 12 funnel traps each, trapping in mesic flatwoods in Jennings Forest WMA, Clay Co., 5/13/93–8/16/93 and 5/19/93–8/16/93 (S. Stiegler, unpubl. data)

Appendix C. Herpetofaunal drift-fence data from mesic and scrubby flatwoods sites in central Florida (X denotes a species observed but not captured by drift fences).

Species	Mesic flatwoods[a]	Mesic flatwoods[b]	Mesic flatwoods[c]	Mesic flatwoods[d]	Mesic flatwoods[e]	Scrubby flatwoods[e]	Scrubby flatwoods[f]	Scrubby flatwoods[g]
Salamanders								
Striped newt	1	0	0	0	0	0	0	0
Eastern newt	0	0	1	0	0	0	1	0
Dwarf siren	0	0	1	0	0	0	0	0
Anurans								
Southern cricket frog	0	0	1	0	11	0	3	0
Oak toad	2	3	2	11	2	8	1	14
Southern toad	28	0	3	2	9	3	2	2
Greenhouse frog	151	X	0	0	5	0	0	0
Eastern narrowmouth toad	12	5	1	6	4	33	5	27
Green treefrog	0	0	0	0	0	2	0	0
Pinewoods treefrog	2	0	0	X	13	5	0	1
Barking treefrog	0	0	0	0	1	0	0	0
Squirrel treefrog	2	1	X	0	0	2	2	0
Little grass frog	4	0	0	0	0	0	0	1
Gopher frog	0	0	0	0	75	3	0	0
Bullfrog	0	1	0	0	0	2	0	1
Pig frog	0	0	0	1	0	3	1	10
Florida leopard frog	2	17	19	6	121	18	53	8
Eastern spadefoot	17	5	0	0	3	8	4	14
Unidentified anuran	1	0	0	0	1	0	0	0
No. amphibians	222	32	28	26	245	87	72	78
No. amphibian species	10	6	7	5	10	11	9	9
No. amphibians/array-day	0.240	0.087	0.037	0.096	0.408	0.119	0.096	0.138
No. amphibians/km-day	7.90	3.83	1.64	4.22	13.92	5.21	4.22	6.06
Turtles								
Florida softshell	0	0	0	0	0	0	0	2
Gopher tortoise	0	0	X	X	0	0	2	X
Striped mud turtle	0	0	3	X	0	0	3	0
Eastern mud turtle	0	0	2	1	1	0	1	0
Cooter	0	0	1	0	0	0	0	1
Eastern box turtle	0	0	2	0	0	0	0	0
Lizards								
Green anole	1	1	1	0	12	3	2	0
Six-lined racerunner	0	1	1	9	26	33	10	37
Five-lined skink	0	0	1	0	0	0	1	0
Southeastern five-lined skink	14	1	2	2	30	2	1	0
Broadhead skink	0	0	1	0	0	0	0	0
Eastern slender glass lizard	0	0	0	0	0	1	0	0
Eastern glass lizard	0	0	0	1	0	0	0	0
Southern fence lizard	3	0	0	0	2	0	1	1
Ground skink	27	4	1	0	23	4	2	1
Unidentified lizard	0	0	0	0	2	0	0	0
Snakes								
Scarlet snake	0	0	0	0	3	6	4	1
Racer	0	4	8	0	31	8	3	2
Eastern diamondback rattlesnake	0	0	0	X	0	0	0	0
Ringneck snake	0	0	0	0	0	0	0	1
Eastern indigo snake	0	0	X	0	0	0	0	0
Corn snake	0	0	0	1	2	1	0	0
Southern hognose snake	0	0	0	0	1	0	0	0
Common kingsnake	0	0	X	0	0	0	X	0
Eastern coachwhip	0	0	0	0	7	0	0	0
Eastern coral snake	0	0	0	0	0	3	1	2
Florida green water snake	0	0	0	0	0	0	0	1
Rough green snake	0	0	0	1	0	0	0	0
Florida pine snake	0	0	0	0	1	0	0	0
Black swamp snake	0	0	0	1	0	3	0	3
Dusky pigmy rattlesnake	0	0	0	0	1	0	0	0
Florida redbelly snake	0	0	1	0	0	1	0	0
Florida crowned snake	0	0	0	0	0	13	0	0

Appendix C. Continued.

Species	Mesic flatwoods[a]	Mesic flatwoods[b]	Mesic flatwoods[c]	Mesic flatwoods[d]	Mesic flatwoods[e]	Scrubby flatwoods[e]	Scrubby flatwoods[f]	Scrubby flatwoods[g]
Snakes (continued)								
Eastern ribbon snake	0	0	4	0	2	0	2	0
Common garter snake	1	0	0	0	1	0	1	0
No. reptiles	46	11	28	16	145	78	34	52
No. reptile species	5	5	13	7	15	12	14	11
No. reptiles/array-day	0.050	0.030	0.037	0.059	0.242	0.107	0.045	0.092
No. reptiles/km-day	1.64	1.32	1.64	2.60	8.24	4.67	1.99	4.04
No. amphibians and reptiles	268	43	56	42	390	165	106	130
No. animals/array-day	0.290	0.117	0.075	0.156	0.650	0.225	0.142	0.230
No. animals/km-day	9.54	5.15	3.28	6.82	22.16	9.89	6.22	10.09
No. days	231	366	374	135	200	366	374	188.33
No. array-days	924	366	748	270	600	732	748	565
Total fence length (m)	121.6	22.8	45.6	45.6	88.0	45.6	45.6	68.4

[a] Four 4-fence arrays, with 4 funnel traps and 8 pitfall traps each, trapping in mesic flatwoods with longleaf pines at Heather Island in Ocala National Forest, Marion Co., 5/01/75–10/11/75 (Florida Game and Fresh Water Fish Commission 1976)

[b] One 3-fence array, with 6 funnel traps and 4 pitfall traps, trapping in mesic flatwoods with longleaf and slash pines N of Dunnellon, Marion Co., 12/12/90–12/13/91 (Joiner and Godwin 1992*e*)

[c] Two 3-fence arrays, with 6 funnel traps and 4 pitfall traps each, trapping in mesic flatwoods with pond pines (*Pinus serotina*) W of Crystal River, Citrus Co., 12/04/90–12/13/91 (Joiner and Godwin 1992*a*)

[d] Two 3-fence arrays, with 6 funnel traps and 4 pitfall traps each, trapping in mesic flatwoods with slash pines E of Lake Panasoffkee, Sumter Co., 8/01/91–12/13/91 (Joiner and Godwin 1992*b*)

[e] Three 3-fence arrays of silt fencing, with 12 funnel traps each, trapping in mesic flatwoods with slash pines in Chassahowitzka WMA, Hernando Co., 7/06/95–6/20/96 (K. Wood, unpubl. data)

[f] Two 3-fence arrays, with 6 funnel traps and 4 pitfall traps each, trapping in scrubby flatwoods N of Dunnellon, Marion Co., 12/12/90–12/13/91 (Joiner and Godwin 1992*e*)

[g] Two 3-fence arrays, with 6 funnel traps and 4 pitfall traps each, trapping in scrubby flatwoods W of Crystal River, Citrus Co., 12/04/90–12/13/91 (Joiner and Godwin 1992*a*)

[h] Three 3-fence arrays, with 6 funnel traps and 4 pitfall traps each, trapping in scrubby flatwoods E of Lake Panasoffkee, Sumter Co., 8/01/91–12/13/91 and 2/21/91–12/13/91 (Joiner and Godwin 1992*b*)

Appendix D. Herpetofaunal drift-fence data from flatwoods sites in southern Florida (X denotes a species observed but not captured by drift fences).

Species	Wet flatwoods[a]	Mesic flatwoods[b]	Mesic flatwoods[c]	Mesic flatwoods[d]	Mesic flatwoods[e]	Mesic flatwoods[f]	Scrubby flatwoods[g]
Anurans							
Southern cricket frog	41	0	0	0	8	1	7
Oak toad	53	3	4	1	16	108	31
Southern toad	2	1	6	14	44	11	17
Greenhouse frog	17	2	0	4	24	11	26
Eastern narrowmouth toad	16	14	90	8	101	21	14
Green treefrog	0	0	0	0	13	0	0
Pinewoods treefrog	7	1	2	0	7	1	18
Barking treefrog	0	0	0	0	2	0	2
Squirrel treefrog	0	0	0	3	3	0	1
Cuban treefrog	0	0	0	0	2	0	0
Southern chorus frog	2	0	0	0	2	0	0
Little grass frog	1	0	0	0	0	0	0
Gopher frog	0	0	0	0	4	1	21
Pig frog	2	0	1	0	2	1	5
Florida leopard frog	65	20	25	1	43	3	19
Eastern spadefoot	0	0	25	1	574	0	0
Unidentified anuran	0	0	0	0	>18	0	0
No. amphibians	206	41	153	32	>863	158	161
No. amphibian species	10	6	7	7	15	9	11
No. amphibians/array-day	0.613	0.061	0.227	0.094	>0.584	0.470	0.479
No. amphibians/km-day	26.89	2.67	9.96	4.14	>19.46	20.62	21.02
Turtles							
Gopher tortoise	0	0	4	X	2	0	1
Striped mud turtle	0	1	2	0	0	0	0
Eastern mud turtle	0	0	0	1	2	0	0
Cooter	0	0	0	0	1	0	0
Lizards							
Green anole	0	1	1	0	7	0	0
Brown anole	0	0	0	0	4	0	0
Six-lined racerunner	16	0	14	5	60	86	122
Mole skink	0	0	0	1	0	8	3
Southeastern five-lined skink	4	4	19	9	60	2	4
Eastern glass lizard	1	1	4	0	0	0	0
Ground skink	3	19	14	5	8	4	2
Unidentified skink	0	0	0	0	12	0	0
Snakes							
Scarlet snake	2	8	1	2	3	1	4
Racer	4	4	4	2	42	9	5
Eastern diamondback rattlesnake	0	0	1	0	0	0	2
Ringneck snake	0	2	0	2	4	0	0
Eastern indigo snake	0	0	0	0	1	0	1
Corn snake	1	0	0	0	2	0	1
Rat snake	0	0	2	2	1	0	0
Eastern mud snake	1	0	0	0	0	0	1
Scarlet kingsnake	0	2	0	0	0	0	0
Eastern coachwhip	0	0	0	0	0	6	1
Eastern coral snake	1	0	0	1	0	1	0
Rough green snake	0	0	0	0	1	0	0
Striped crayfish snake	1	0	0	0	0	0	0
Black swamp snake	0	0	0	0	0	0	4
Dusky pigmy rattlesnake	3	0	1	0	0	0	0
Florida crowned snake	0	0	0	3	0	10	14
Eastern ribbon snake	3	7	0	0	5	0	2
Common garter snake	2	3	2	1	5	5	0
No. reptiles	42	52	69	34	220	132	167
No. reptile species	13	11	13	12	17	10	15
No. reptiles/array-day	0.125	0.077	0.102	0.100	0.149	0.393	0.497
No. reptiles/km-day	5.48	3.38	4.49	4.40	4.96	17.23	21.80

Appendix D. Continued.

Species	Wet flatwoods[a]	Mesic flatwoods[b]	Mesic flatwoods[c]	Mesic flatwoods[d]	Mesic flatwoods[e]	Mesic flatwoods[f]	Scrubby flatwoods[g]
No. amphibians and reptiles	248	93	222	66	>1,083	290	328
No. animals/array-day	0.738	0.138	0.329	0.195	>0.734	0.863	0.976
No. animals/km-day	32.37	6.05	14.45	8.54	>24.46	37.86	42.82
No. days	168	337	337	339	1,478	168	168
No. array-days	336	674	674	339	1,478	336	336
Total fence length (m)	45.6	45.6	45.6	22.8	30.0	45.6	45.6

[a] Two 3-fence arrays, with 6 funnel traps and 4 pitfall traps each, trapping in wet flatwoods with slash pines in Jonathan Dickinson State Park, Martin Co., 7/91–12/93 (Timmerman et al. 1994)

[b] Two 3-fence arrays, with 6 funnel traps and 4 pitfall traps each, trapping in mesic flatwoods with slash pines E of Lake Tarpon, Pinellas Co., 1/05/91–12/17/91 (Joiner and Godwin 1992*c*)

[c] Two 3-fence arrays, with 6 funnel traps and 4 pitfall traps each, trapping in mesic flatwoods with longleaf pines E of Lake Tarpon, Pinellas Co., 1/05/91–12/17/91 (Joiner and Godwin 1992*c*)

[d] One 3-fence array, with 6 funnel traps and 4 pitfall traps, trapping in mesic flatwoods with longleaf pines N of Lake Thonotosassa, Hillsborough Co., 1/11/91–12/16/91 (Joiner and Godwin 1992*d*)

[e] One 2-fence array, with 15-m-long arms with 2 funnel traps and 4 pitfall traps per arm, trapping in mesic flatwoods (1 arm adjacent to a depression marsh) in Oscar Scherer State Recreation Area, Sarasota Co., 9/12/90–9/30/95 (Hingtgen 1990, 1994*c*, 1995*d*)

[f] Two 3-fence arrays, with 6 funnel traps and 4 pitfall traps each, trapping in mesic flatwoods with longleaf pines in Jonathan Dickinson State Park, Martin Co., 7/91–12/93 (Timmerman et al. 1994)

[g] Two 3-fence arrays, with 6 funnel traps and 4 pitfall traps each, trapping in scrubby flatwoods in Jonathan Dickinson State Park, Martin Co., 7/91–12/93 (Timmerman et al. 1994)

Appendix E. Herpetofaunal drift-fence data from sandhill sites in the Panhandle and northern peninsular Florida (X denotes a species observed but not captured by drift fences).

Species	Sandhill/ flatwoods[a]	Mature sandhill[b]	Young sandhill[c]	Sandhill[d]	Sandhill[e]	Sandhill[f]	Sandhill[g]
Salamanders							
Mole salamander	0	40	5	0	0	1	0
Striped newt	0	6	11	0	0	3	0
Eastern newt	22	10	28	0	0	0	0
Southeastern slimy salamander	10	0	0	0	0	0	0
Anurans							
Southern cricket frog	3	3	2	0	X	0	0
Oak toad	138	8	11	9	1	2	0
Southern toad	13	30	18	1	15	13	2
Eastern narrowmouth toad	21	18	18	11	51	1	6
Green treefrog	0	0	0	0	0	1	0
Pinewoods treefrog	X	1	1	5	0	1	0
Barking treefrog	X	1	0	0	1	0	0
Squirrel treefrog	0	0	0	2	1	0	0
Southern chorus frog	0	0	0	0	0	1	0
Ornate chorus frog	0	3	8	0	0	0	0
Gopher frog	2	0	1	2	0	0	0
Bronze frog	3	0	0	0	0	0	0
Pig frog	X	5	0	0	0	0	0
River frog	0	1	0	0	0	0	0
Florida leopard frog	5	11	18	16	4	4	0
Eastern spadefoot	0	18	2	18	38	3	6
Unidentified anuran	0	0	0	1	5	0	1
No. amphibians	217	155	123	65	116	30	15
No. amphibian species	9	14	12	8	7	10	3
No. amphibians/array-day	0.197	0.055	0.052	0.425	0.266	0.027	0.082
No. amphibians/km-day	24.57	1.82	1.72	18.63	11.67	0.88	3.58
Turtles							
Gopher tortoise	0	0	0	3	0	0	1
Eastern mud turtle	2	0	0	0	0	0	X
Eastern box turtle	0	0	0	X	0	0	1
Lizards							
Green anole	0	67	15	1	3	3	2
Six-lined racerunner	0	71	156	22	9	54	0
Mole skink	0	42	54	1	0	0	0
Five-lined skink	0	0	0	0	0	1	0
Southeastern five-lined skink	0	14	7	0	0	1	0
Broadhead skink	1	0	1	0	0	2	0
Eastern slender glass lizard	0	1	1	0	0	0	0
Island glass lizard	0	0	0	0	0	1	0
Eastern glass lizard	0	0	3	0	0	1	0
Southern fence lizard	2	59	16	3	39	10	0
Ground skink	13	93	13	0	1	20	6
Snakes							
Cottonmouth	X	0	0	0	0	0	0
Scarlet snake	0	3	8	3	2	4	1
Racer	0	13	13	1	10	8	0
Timber rattlesnake	0	0	0	0	0	1	0
Ringneck snake	0	0	0	0	1	0	0
Corn snake	0	0	0	0	1	0	0
Eastern hognose snake	X	1	4	0	0	0	1
Scarlet kingsnake	0	0	0	0	1	0	0
Eastern coachwhip	0	1	5	0	2	0	0
Eastern coral snake	0	1	0	0	1	2	1
Rough green snake	0	0	0	0	1	0	0
Florida pine snake	0	1	0	0	0	0	1
Pine woods snake	0	0	0	0	0	1	0
Glossy crayfish snake	0	0	0	0	0	1	0
Dusky pigmy rattlesnake	X	1	2	0	4	2	X
Florida redbelly snake	1	2	0	0	0	0	0

Appendix E. Continued.

Species	Sandhill/ flatwoods[a]	Mature sandhill[b]	Young sandhill[c]	Sandhill[d]	Sandhill[e]	Sandhill[f]	Sandhill[g]
Snakes (continued)							
Southeastern crowned snake	2	0	0	0	0	0	0
Rough earth snake	0	0	0	0	0	1	0
Eastern earth snake	0	10	3	0	0	0	0
Unidentified snake	0	0	0	0	1	0	0
No. reptiles	21	380	301	34	76	113	14
No. reptile species	6	16	15	7	13	17	8
No. reptiles/array-day	0.019	0.136	0.128	0.222	0.174	0.101	0.076
No. reptiles/km-day	2.38	4.46	4.20	9.75	7.65	3.31	3.34
No. amphibians and reptiles	238	535	424	99	192	143	29
No. animals/array-day	0.216	0.191	0.180	0.647	0.440	0.127	0.158
No. animals/km-day	26.95	6.28	5.91	28.38	19.31	6.91	
No. days	276	467.33	589.5	153	218	281	92
No. array-days	1,104	2,804	2,358	153	436	1,124	184
Total fence length (m)	32.0	182.4	121.6	22.8	45.6	121.6	45.6

[a] Four 8-m fences of clear plastic, with pitfall traps, trapping adjacent to depression marshes along a sandhill/flatwoods ecotone NW of Valparaiso on Eglin Air Force Base, Okaloosa Co., 2/26/1989–11/28/89 (Studenroth 1992)

[b] Six 4-fence arrays, with 8 funnel traps and 8 pitfall traps each, trapping in 3 sandhill sites (2 arrays per site) with ≈60-year-old longleaf pines and turkey oaks (*Quercus laevis*) in St. Marks NWR, Wakulla Co., 11/09/77–7/09/79, 12/15/77–7/10/79, and 11/29/78–7/09/79 (U.S. Fish and Wildlife Service 1980)

[c] Two 4-fence arrays, with 8 funnel traps and 8 pitfall traps each, trapping in a sandhill clearcut with 1-year-old longleaf pines and turkey oaks, 11/09/77–7/09/79, and 2 identical arrays in a sandhill clearcut with 8-year-old longleaf pines and turkey oaks, 12/14/77–7/09/79, in St. Marks NWR, Wakulla Co. (U.S. Fish and Wildlife Service 1980)

[d] One 3-fence array, with 9 funnel traps and 1 pitfall, trapping in a sandhill site with planted 11-year-old slash pines in Spring Creek Unit of Big Bend WMA, Taylor Co., 5/29/92–10/29/92 (Enge and Wood 1998)

[e] Two 3-fence arrays, with 9 funnel traps and 1 pitfall trap each, trapping in a sandhill site with planted longleaf pines in Tide Swamp Unit of Big Bend WMA, Taylor Co., 3/25/93–10/29/93 (Enge and Wood 1998)

[f] Four 4-fence arrays, with 8 funnel traps and 8 pitfall traps each, trapping in a sandhill with longleaf pines and turkey oaks in Osceola National Forest, Baker Co., 10/12/76–7/20/77 (U.S. Fish and Wildlife Service 1978)

[g] Two 3-fence arrays of silt fencing, with 12 funnel traps each, trapping in a sandhill in Jennings Forest WMA, Clay Co., 5/13/93–8/16/93 and 5/19/93–8/16/93 (S. Stiegler, unpubl. data)

Appendix F. Herpetofaunal drift-fence data from sandhill sites in central and southern peninsular Florida (X denotes a species observed but not captured by drift fences).

Species	Sandhill[a]	Sandhill[b]	Sandhill[c]	Sandhill[d]	Sandhill[e]	Sandhill[f]	Sandhill[g]	Sandhill[h]	Sandhill[i]	Sandhill[j]
Salamanders										
Eastern tiger salamander	0	0	0	0	0	0	0	1	0	0
Dwarf salamander	0	1	0	0	0	0	0	0	0	0
Striped newt	0	10	0	0	1	0	0	0	0	0
Eastern newt	1	0	0	0	0	0	0	0	0	0
Anurans										
Southern cricket frog	2	2	1	0	0	0	0	34	41	0
Oak toad	0	35	0	0	27	26	1	17	7	1
Southern toad	2	20	6	6	3	0	3	86	8	170
Greenhouse frog	8	0	0	1	10	0	1	67	15	5
Eastern narrowmouth frog	15	154	45	10	57	15	47	340	13	68
Green treefrog	0	0	0	0	X	0	0	0	0	2
Pinewoods treefrog	0	1	0	0	0	0	0	55	18	0
Barking treefrog	0	0	0	0	6	1	0	50	5	0
Squirrel treefrog	0	0	0	0	1	0	0	7	1	0
Southern chorus frog	0	0	0	0	1	0	0	0	0	0
Little grass frog	0	0	0	0	0	0	0	4	0	0
Gopher frog	0	4	0	0	16	1	1	49	105	1
Bullfrog	0	0	0	0	0	0	1	10	0	0
Bronze frog	3	0	0	0	0	0	0	0	0	0
Pig frog	0	0	0	0	0	0	0	7	1	19
Florida leopard frog	0	2	0	0	18	9	5	403	72	9
Eastern spadefoot	27	1,152	5	1	50	13	13	318	6	31
Unidentified anuran	0	0	0	0	0	1	0	11	2	0
No. amphibians	58	1,381	57	18	190	66	72	1,459	294	306
No. amphibian species	7	10	4	4	11	6	8	15	12	9
No. amphibians/array-day	0.483	0.750	0.052	0.017	0.102	0.232	0.244	2.573	0.519	0.021
No. amphibians/km-day	21.20	24.66	1.71	0.55	4.49	n/a	10.70	87.72	17.68	3.49
Turtles										
Florida softshell	0	0	0	0	0	0	0	X	0	0
Gopher tortoise	0	0	0	0	2	0	0	X	1	0
Striped mud turtle	0	0	0	0	0	0	0	0	0	50
Eastern mud turtle	0	0	0	0	0	0	0	5	0	0
Florida redbelly turtle	0	0	0	0	0	0	0	X	0	0
Lizards										
Green anole	4	9	4	5	10	1	1	9	4	13
Six-lined racerunner	0	138	9	3	30	49	3	13	75	400
Mole skink	0	17	0	14	13	1	0	0	1	0
Southeastern five-lined skink	3	28	19	16	46	6	1	38	30	96
Broadhead skink	0	0	0	0	0	0	1	0	0	0
Eastern slender glass lizard	0	0	0	0	2	0	0	0	1	0
Eastern glass lizard	0	0	0	1	0	0	0	0	0	0
Southern fence lizard	15	91	0	9	6	8	0	32	6	0
Ground skink	16	17	38	31	33	0	1	81	39	25
Unidentified lizard	0	0	0	0	0	0	0	1	1	0

Appendix F. Continued.

Species	Sandhill[a]	Sandhill[b]	Sandhill[c]	Sandhill[d]	Sandhill[e]	Sandhill[f]	Sandhill[g]	Sandhill[h]	Sandhill[i]	Sandhill[j]
Snakes										
Scarlet snake	1	3	0	0	3	0	0	16	5	4
Racer	2	0	0	0	22	1	3	26	17	16
Eastern diamondback rattlesnake	0	0	0	0	0	0	0	1	1	2
Ringneck snake	0	0	0	0	8	0	0	2	1	3
Eastern indigo snake	0	0	0	0	0	0	0	0	0	4
Corn snake	0	0	0	0	1	0	0	6	1	0
Rat snake	0	0	0	0	0	0	0	1	0	0
Eastern mud snake	0	0	0	0	0	0	0	0	0	2
Eastern hognose snake	0	0	0	0	0	0	0	0	0	1
Southern hognose snake	0	0	0	2	1	0	0	0	0	0
Scarlet kingsnake	0	0	0	0	2	1	0	0	0	0
Eastern coachwhip	0	0	0	1	1	0	0	0	2	0
Eastern coral snake	0	1	2	0	7	1	0	6	4	0
Southern water snake	0	0	0	0	0	0	0	0	0	3
Florida green water snake	0	0	0	0	0	0	1	0	0	0
Florida pine snake	0	0	1	0	0	1	0	0	0	0
Pine woods snake	0	0	0	0	0	0	0	1	0	2
Black swamp snake	0	0	0	0	0	0	1	0	0	0
Dusky pigmy rattlesnake	0	0	2	1	0	0	0	0	2	0
Florida redbelly snake	0	0	0	0	1	0	0	0	1	0
Short-tailed snake	0	0	0	1	0	0	0	0	0	1
Florida crowned snake	0	24	27	17	63	0	0	4	2	99
Eastern ribbon snake	0	0	0	0	0	0	1	0	0	1
Common garter snake	0	0	3	0	0	0	0	0	0	0
Unidentified snake	0	0	0	0	0	0	0	0	1	0
No. reptiles	41	328	105	101	251	69	13	242	195	722
No. reptile species	6	9	9	12	18	9	9	15	18	17
No. reptiles/array-day	0.342	0.178	0.096	0.094	0.135	0 .285	0.044	0.427	0.325	0.049
No. reptiles/km-day	14.99	5.86	3.15	3.09	5.93	n/a	1.93	14.55	11.08	8.24
No. amphibians and reptiles	99	1,709	162	119	441	135	85	1,701	489	1,028
No. animals/array-day	0.825	0.928	0.148	0.111	0.238	0.558	0.288	3.000	0.815	0.070
No. animals/km-day	36.18	30.52	4.86	3.64	10.43	n/a	12.64	102.27	27.28	11.74
No. days	60	460.5	365.3	269	371	242	295	189	200	730
No. array-days	120	1,842	1,096	1,076	1,855	242	295	567	600	14,600
Total fence length (m)	45.6	121.6	91.2	121.6	114.0	n/a	22.8	88.0	88.0	120.0

[a] Two 3-fence arrays, with 6 funnel traps and 4 pitfall traps each, trapping 5 days/month in a longleaf pine-turkey oak sandhill at San Felasco Hammock State Preserve, Alachua Co., 7/20/92–6/18/93 (D. Pearson, unpubl. data)

[b] Four 4-fence arrays, with pitfall traps, trapping in longleaf pine-turkey oak sandhill at Katharine Ordway Preserve, 5 km SE of Melrose, Putnam Co., 11/01/87–7/01/89, 11/25/87–7/01/89, 5/23/88–7/01/89, and 10/28/88–7/01/89 (Franz et al. 1989)

[c] Three 4-fence arrays, with 4 funnel traps and 8 pitfall traps each, trapping in longleaf pine-turkey oak sandhill at Riverside Island in Ocala National Forest, Marion Co., 4/01/75–12/03/75 (Fla. Game and Fresh Water Fish Comm. 1976)

[d] Four 4-fence arrays, with 4 funnel traps and 8 pitfall traps each, trapping in turkey oak sandhill near Dunnellon, Marion Co., 3/20/75–12/19/75 (Fla. Game and Fresh Water Fish Comm. 1976)

[e] Five 3-fence arrays, with 6 funnel traps and 4 pitfall traps each, trapping in longleaf pine-turkey oak sandhill N of Dunnellon, Marion Co., 12/07/90–12/13/91 (Joiner and Godwin 1992*e*)

[f] One 2-fence array, with 4 funnel traps and 8 pitfall traps, trapping in sandhill habitat in Fort Cooper State Park, Citrus Co., 2/95–9/95 (Hingtgen 1995*c*)

[g] One 3-fence array, with 6 funnel traps and 4 pitfall traps, trapping in a turkey oak sandhill E of Lake Panasoffkee, Sumter Co., 2/21/91–12/13/91 (Joiner and Godwin 1992*b*)

[h] Three 3-fence arrays of silt fencing, with 12 funnel traps each, trapping in longleaf pine-turkey oak sandhill at Chinsegut Nature Center, N of Brooksville, Hernando Co., on alternating months 8/28/95–7/13/96 (K. Wood, unpubl. data)

[i] Three 3-fence arrays of silt fencing, with 12 funnel traps each, trapping in longleaf pine-turkey oak sandhill in Chassahowitzka WMA, Hernando Co., 7/06/95–6/20/96 (K. Wood, unpubl. data)

[j] Twenty 6-m-long fences, with 2 pitfall traps and 1 shelter trap each, trapping in a longleaf pine-turkey oak sandhill in University of South Florida Ecological Research Area, Hillsborough Co., 1983–1984 (Mushinsky 1985)

Appendix G. Herpetofaunal drift-fence data from upland pine forest and sand pine plantations in the Panhandle and northern peninsular Florida (X denotes a species observed but not captured by drift fences).

Species	Upland pine[a]	Upland pine[b]	Upland pine[c]	Sand pine plantation[d]	Sand pine plantation[e]
Salamanders					
Marbled salamander	0	3	0	0	0
Mole salamander	0	0	1	0	0
Eastern tiger salamander	0	13	0	0	0
Southeastern slimy salamander	2	3	1	0	0
Anurans					
Southern cricket frog	1	0	4	33	0
Oak toad	0	0	0	17	2
Southern toad	4	66	1	16	11
Greenhouse frog	0	0	10	0	0
Eastern narrowmouth toad	160	22	6	32	24
Cope's gray treefrog	0	0	1	0	0
Green treefrog	0	0	0	2	2
Pinewoods treefrog	0	0	0	11	2
Squirrel treefrog	1	0	0	3	1
Southern chorus frog	0	0	1	0	3
Little grass frog	0	0	0	1	0
Gopher frog	0	0	0	1	0
Bullfrog	0	3	0	0	0
Bronze frog	0	1	2	0	0
Florida leopard frog	0	4	1	57	32
Eastern spadefoot	96	21	24	26	18
Unidentified anuran	0	0	0	9	2
No. amphibians	264	136	52	208	97
No. amphibian species	6	9	11	11	9
No. amphibians/array-day	1.294	0.042	0.433	0.453	0.227
No. amphibians/km-day	85.14	2.69	19.01	19.88	9.94
Turtles					
Gopher tortoise	0	0	0	1	0
Eastern box turtle	0	1	0	0	0
Lizards					
Green anole	2	2	6	3	2
Six-lined racerunner	56	2	0	8	2
Mole skink	1	0	0	6	0
Southeastern five-lined skink	2	0	1	0	0
Broadhead skink	0	14	0	0	2
Southern fence lizard	10	0	9	11	14
Ground skink	13	3	17	1	1
Snakes					
Scarlet snake	0	0	0	3	0
Racer	0	0	1	4	4
Corn snake	0	1	1	0	0
Rat snake	0	0	1	0	0
Eastern hognose snake	1	1	0	0	0
Eastern coachwhip	0	0	0	1	0
Eastern coral snake	0	0	X	1	0
Dusky pigmy rattlesnake	0	0	0	2	2
Florida redbelly snake	0	0	0	0	1
Florida crowned snake	0	0	1	0	0
Eastern ribbon snake	0	0	0	1	0
Common garter snake	0	4	0	0	2
Eastern earth snake	1	0	0	0	0
No. reptiles	86	28	37	42	30
No. reptile species	8	8	8	12	9
No. reptiles/array-day	0.422	0.009	0.308	0.092	0.070
No. reptiles/km-day	27.73	0.55	13.52	4.01	3.07

Appendix G. Continued.

Species	Upland pine[a]	Upland pine[b]	Upland pine[c]	Sand pine plantation[d]	Sand pine plantation[e]
No. amphibians and reptiles	350	164	89	250	127
No. animals/array-day	1.716	0.051	0.742	0.545	0.297
No. animals/km-day	112.87	3.24	32.53	23.89	13.01
No. days	51	1,663	60	153	214
No. array-days	204	3,226	120	459	428
Total fence length (m)	60.8	30.4	45.6	68.4	45.6

[a] Four 2-fence arrays in an "L" or "T" pattern, with 4 funnel traps and 4 pitfall traps each, trapping in disturbed upland pine forest (i.e., mixed pine/hardwood forests and planted slash pine) on ridge tops in the Rock Creek Tract of Torreya State Park, Liberty Co., 5/9/94–7/1/94 (Means and Studenroth 1994)

[b] Two 2-fence arrays in an "L" or "T" pattern, with 4 funnel traps and 4 pitfall traps (i.e., cans) each, trapping in a 90-year-old upland pine forest of shortleaf and loblolly pines (*Pinus taeda*) on clayhills at Tall Timbers Research Station, Leon Co., from 2/01/76–4/10/78 and 9/25/78–2/16/81 (Means and Campbell 1982)

[c] Two 3-fence arrays, with 6 funnel traps and 4 pitfall traps each, trapping 5 days/month in an upland pine forest in San Felasco Hammock State Preserve, Alachua Co., 7/20/92–6/18/93 (D. Pearson, unpubl. data)

[d] Three 3-fence arrays, with 9 funnel traps and 1 pitfall trap each, trapping in sand pine plantations on sandhill sites in Spring Creek Unit of Big Bend WMA, Taylor Co., 5/29/92–10/29/92 (Enge and Wood 1998)

[e] Two 3-fence arrays, with 9 funnel traps and 1 pitfall trap each, trapping in sand pine plantations on sandhill sites in Tide Swamp Unit of Big Bend WMA, Taylor Co., 3/25/93–10/25/92 (Enge and Wood 1998)

Appendix H. Herpetofaunal drift-fence data from scrub sites in northern and central Florida.

	Coastal scrub[a]	Slash pine plantation[b]	Sand pine scrub[c]	Oak scrub[d]	Recent clearcut[e]	Older clearcuts[f]	Sand pine scrub[g]	Young sand pine scrub[h]	Sand pine scrub[i]	Oak scrub[j]
Salamanders										
Dwarf salamander	0	0	0	0	0	0	0	0	0	1
Eastern newt	0	0	0	0	0	4	0	0	0	0
Southeastern slimy salamander	1	0	0	0	0	0	0	0	0	0
Anurans										
Southern cricket frog	0	0	0	0	0	0	0	0	0	1
Oak toad	0	0	1	1	0	6	0	0	0	0
Southern toad	0	1	32	10	181	79	72	23	9	7
Greenhouse frog	0	0	0	0	0	0	0	1	0	20
Eastern narrowmouth toad	27	0	22	2	16	43	5	41	9	52
Cope's gray treefrog	0	0	0	0	0	0	0	0	0	2
Pinewoods treefrog	0	0	0	0	0	0	0	0	0	2
Barking treefrog	0	0	1	0	0	0	0	0	0	0
Squirrel treefrog	0	1	0	0	0	0	0	0	0	1
Gopher frog	0	0	0	1	6	4	0	0	0	2
Pig frog	0	0	0	1	0	0	0	0	0	0
Florida leopard frog	0	4	0	2	0	0	0	0	0	118
Eastern spadefoot	49	2	3	2	17	68	3	65	23	0
Unidentified anuran	0	4	0	1	0	0	0	0	0	3
No. amphibians	77	12	59	20	222	204	80	130	41	209
No. amphibian species	3	4	5	7	4	6	3	4	3	10
No. amphibians/array-day	n/a	0.028	0.055	0.037	0.176	0.055	0.032	0.074	0.070	0.348
No. amphibians/km-day	n/a	1.21	1.80	1.20	5.80	1.78	1.04	1.22	1.15	11.88
Turtles										
Gopher tortoise	0	0	0	0	0	1	0	3	0	0
Striped mud turtle	0	0	1	0	0	0	0	0	0	0
Eastern mud turtle	0	0	0	0	0	0	0	0	0	2
Amphisbaenids										
Florida worm lizard	0	0	1	1	0	1	0	1	0	0
Lizards										
Green anole	1	1	6	3	16	40	46	39	9	5
Six-lined racerunner	15	49	3	19	123	171	35	93	7	13
Mole skink	0	0	3	14	31	67	26	112	4	0
Five-lined skink	4	0	0	0	0	0	0	0	0	0
Southeastern five-lined skink	1	1	28	10	39	15	59	10	40	50
Broadhead skink	12	0	0	0	0	0	0	0	0	12
Eastern slender glass lizard	1	0	0	0	0	0	0	0	0	0
Eastern glass lizard	0	1	0	0	0	0	0	0	0	0
Southern fence lizard	0	14	1	1	0	0	0	0	0	0
Florida scrub lizard	0	0	1	0	81	118	17	226	5	0
Ground skink	1	0	18	1	8	4	35	8	11	22

Appendix H. Continued.

	Coastal scrub[a]	Slash pine plantation[b]	Sand pine scrub[c]	Oak scrub[d]	Recent clearcut[e]	Older clearcuts[f]	Sand pine scrub[g]	Young sand pine scrub[h]	Sand pine scrub[i]	Oak scrub[j]
Snakes										
Scarlet snake	0	8	4	3	2	11	3	0	0	11
Racer	2	3	1	2	5	1	3	5	2	13
Eastern diamondback rattlesnake	0	0	0	0	0	0	0	0	0	1
Ringneck snake	0	0	1	0	0	0	0	0	0	0
Eastern indigo snake	0	0	0	0	0	0	0	0	0	2
Corn snake	0	0	0	0	1	3	0	1	2	0
Rat snake	0	1	0	0	0	0	0	0	0	0
Eastern hognose snake	0	0	0	0	1	0	0	1	0	0
Scarlet kingsnake	0	2	0	0	0	0	1	0	0	0
Eastern coachwhip	0	1	0	1	2	8	2	4	0	0
Eastern coral snake	0	0	1	0	1	0	0	1	1	9
Rough green snake	0	0	0	0	0	0	0	1	0	0
Florida pine snake	0	0	0	0	0	0	0	1	0	0
Black swamp snake	0	1	0	0	0	0	0	0	0	0
Dusky pigmy rattlesnake	0	1	0	0	0	0	1	4	1	0
Short-tailed snake	0	0	0	1	0	0	0	0	0	0
Florida redbelly snake	0	0	0	1	0	0	0	0	0	2
Florida crowned snake	0	0	20	11	42	76	22	55	11	0
Eastern ribbon snake	0	4	0	0	0	0	0	0	0	7
Unidentified snake	0	1	0	0	0	0	0	0	0	1
No. reptiles	37	88	89	68	352	516	250	565	93	150
No. reptile species	8	13	14	13	13	13	12	17	11	13
No. reptiles/array-day	n/a	0.202	0.083	0.125	0.279	0.140	0.099	0.322	0.159	0.250
No. reptiles/km-day	n/a	8.85	2.72	4.10	9.19	4.49	3.26	5.30	2.61	8.52
No. amphibians and reptiles	114	100	148	88	574	720	330	695	134	359
No. animals/array-day	n/a	0.229	0.138	0.161	0.456	0.196	0.131	0.396	0.229	0.598
No. animals/km-day	n/a	10.06	4.52	5.30	14.99	6.27	4.31	6.51	3.77	20.40
No. days	n/a	218	269	273	630	630	630	195	195	200
No. array-days	n/a	436	1,076	546	1,260	3,780	2,520	1,755	585	600
Total fence length (m)	45.6	45.6	121.6	60.8	60.8	182.4	121.6	547.2	182.4	88.0

[a] Two 3-fence arrays, with 6 funnel traps and 4 pitfall traps each, trapping in coastal scrub on Big Talbot Island, Duval Co. (M. Wingate et al., unpubl. data)

[b] Two 3-fence arrays, with 9 funnel traps and 1 pitfall trap each, trapping in scrub sites with 11-year-old planted slash pines in Tide Swamp Unit of Big Bend WMA, Taylor Co., 3/25/93–10/29/93 (Enge and Wood 1998)

[c] Four 4-fence arrays, with 4 funnel traps and 8 pitfall traps each, trapping in sand pine scrub in Ocala National Forest, Marion Co., 3/25/75–12/19/75 (Florida Game and Fresh Water Fish Commission 1976)

[d] Two 4-fence arrays, with 4 funnel traps and 8 pitfall traps each, trapping in oak/rosemary (*Ceratiola ericoides*) scrub in Ocala National Forest, Marion Co., 3/20/75–12/18/75 (Florida Game and Fresh Water Fish Commission 1976)

[e] Two 4-fence arrays, with 8 funnel traps and 8 pitfall traps each, trapping in a 1-year-old clearcut in sand pine scrub and 2 identical arrays trapping in a 4-year-old clearcut in sand pine scrub in Ocala National Forest, Marion Co., 7/13/76–4/04/78 (Christman et al. 1979)

[f] Six 4-fence arrays, with 8 funnel traps and 8 pitfall traps each, (2 arrays each in 4-, 6-, and 8-year-old clearcuts) trapping in sand pine scrub in Ocala National Forest, Marion Co., 7/13/76–4/04/78 (Christman et al. 1979)

[g] Two 4-fence arrays, with 8 funnel traps and 8 pitfall traps each, trapping in a 17-year-old and a 44-year-old sand pine scrub in Ocala National Forest, Marion Co., 7/13/76–4/04/78 (Christman et al. 1979)

[h] Nine 8-fence arrays (fences spaced 7.6 m apart in an "L" pattern), with 2 funnel traps and 2 pitfall traps per fence, trapping 2 weeks on and 2 weeks off in 5- to 7-year-old sand pine scrub in Ocala National Forest, Marion Co, 8/91–9/92 (Greenberg 1993)

[i] Three 8-fence arrays (fences spaced 7.6 m apart in an "L" pattern), with 2 funnel traps and 2 pitfall traps per fence, trapping 2 weeks on and 2 weeks off in >55-year-old sand pine scrub in Ocala National Forest, Marion Co, 8/91–9/92 (Greenberg 1993)

[j] Three 3-fence arrays of silt fencing, with 12 funnel traps each, trapping in oak scrub in Chassahowitzka WMA, Hernando Co., 7/06/95–6/20/96 (K. Wood, unpubl. data)

Appendix I. Herpetofaunal drift-fence data from scrub sites in southern Florida.

Species	Boy Scout Camp[a]	Arbuckle WMA[b]	Sebring[c]	Lake Istokpoga[d]	YMCA Camp[e]	Hendrie Ranch[f]	Jonathan Dickinson[g]
Anurans							
Oak toad	0	2	1	1	1	0	1
Southern toad	2	185	0	0	0	7	1
Greenhouse frog	1	1	1	1	5	1	6
Eastern narrowmouth toad	0	4	1	0	0	2	13
Pinewoods treefrog	0	0	0	0	0	0	1
Gopher frog	1	0	0	0	0	1	16
Bullfrog	2	0	0	0	0	0	0
Florida leopard frog	2	0	0	0	0	1	1
Eastern spadefoot	4	14	0	0	0	0	18
Unidentified anuran	1	8	0	0	0	1	2
No. amphibians	13	214	3	2	6	13	59
No. amphibian species	6	5	3	2	2	5	8
No. amphibians/array-day	0.019	0.311	0.004	0.003	0.009	0.019	0.176
No. amphibians/km-day	2.49	40.99	0.57	0.38	1.23	2.49	7.70
Lizards							
Green anole	5	0	2	1	0	0	1
Six-lined racerunner	4	8	12	16	14	11	77
Mole skink	7	0	0	2	7	0	7
Southeastern five-lined skink	0	0	1	0	5	1	3
Sand skink	6	4	7	9	3	5	0
Florida scrub lizard	36	22	5	39	18	44	109
Ground skink	0	0	0	0	1	0	0
Snakes							
Scarlet snake	1	0	0	0	0	0	4
Racer	5	2	1	0	1	1	5
Eastern indigo snake	0	0	1	0	0	0	0
Corn snake	0	0	1	0	0	0	0
Scarlet kingsnake	0	0	0	0	0	0	1
Eastern coachwhip	1	0	3	3	0	7	9
Rough green snake	0	0	0	0	1	0	0
Dusky pigmy rattlesnake	0	0	0	1	0	0	0
Short-tailed snake	0	0	0	0	1	0	0
Brown snake	0	0	2	0	0	0	0
Florida crowned snake	6	4	4	10	12	1	7
Eastern ribbon snake	0	0	0	0	0	0	1
Unidentified snake	1	0	0	0	0	0	0
No. reptiles	72	40	39	81	63	70	224
No. reptile species	9	5	11	8	10	7	11
No. reptiles/array-day	0.105	0.058	0.057	0.118	0.098	0.102	0.667
No. reptiles/km-day	13.79	7.66	7.47	15.51	12.93	13.41	29.24
No. amphibians and reptiles	85	254	42	83	69	83	283
No. animals/array-day	0.124	0.370	0.061	0.121	0.108	0.121	0.842
No. animals/km-day	16.28	48.65	8.04	15.90	14.16	15.90	36.94
No. days	229	229	229	229	213.67	229	168
No. array-days	687	687	687	687	641	687	336
Total fence length (m)	22.8	22.8	22.8	22.8	22.8	22.8	45.6

[a] Three 7.6-m long-fences, with 2 funnel traps and 2 pitfall traps each, trapping in oak scrub at Flaming Arrow Boy Scout Camp, S of Hesperides, Polk Co., 9/02/87–4/19/88 (Christman 1988)

[b] Three 7.6-m-long fences, with 2 funnel traps and 2 pitfall traps each, trapping in sand pine scrub in Arbuckle WMA, Polk Co., 9/02/87–4/19/88 (Christman 1988)

[c] Three 7.6-m-long fences, with 2 funnel traps and 2 pitfall traps each, trapping in sand/slash pine scrub SE of Sebring, Highlands Co., 9/02/87–4/19/88 (Christman 1988)

[d] Three 7.6-m-long fences, with 2 funnel traps and 2 pitfall traps each, trapping in sand pine/rosemary scrub W of Lake Istokpoga, Highlands Co., 9/02/87–4/19/88 (Christman 1988)

[e] Three 7.6-m-long fences (1 fence stolen partway through study), with 2 funnel traps and 2 pitfall traps each, trapping in sand pine/hickory scrub at the YMCA's Camp Florida, W of Grassy Lake, Highlands Co., 9/02/87–4/19/88 (Christman 1988)

[f] Three 7.6-m-long fences, with 2 funnel traps and 2 pitfall traps each, trapping in rosemary scrub (i.e., bald) along Josephine Creek, NE of Venus, Highlands Co., 9/02/87–4/19/88 (Christman 1988)

[g] Two 3-fence arrays, with 6 funnel traps and 4 pitfall traps each, trapping in sand pine scrub in Jonathan Dickinson State Park, Martin Co., 7/91–12/93 (Timmerman et al. 1994)

Appendix J. Herpetofaunal drift-fence data from rosemary scrub (i.e., balds) sites sampled by Mushinsky and McCoy (1991) along the Lake Wales Ridge (X denotes a species observed or captured by drift fences but whose number of individuals was not reported).

	Archbold Biol. Stn[a]	Hendrie Ranch[b]	Arbuckle WMA[c]	Highlands Hammock[d]	Lake Istokpoga[e]	Combined sites[f]
Anurans						
Southern cricket frog	0	X	0	0	0	0
Oak toad	87	6	83	9	5	6
Southern toad	20	38	89	10	5	20
Greenhouse frog	2	4	0	4	0	0
Eastern narrowmouth toad	17	33	34	23	2	18
Green treefrog	0	0	X	0	0	X
Pinewoods treefrog	0	0	19	0	0	0
Barking treefrog	0	X	0	0	0	0
Squirrel treefrog	0	0	0	0	0	X
Little grass frog	X	0	0	0	0	0
Gopher frog	8	5	3	1	0	0
Florida leopard frog	X	X	3	0	0	X
Eastern spadefoot	0	0	15	6	0	2
No. amphibians	≥136	≥89	≥247	53	12	≥49
No. amphibian species	7	8	8	6	3	7
No. amphibians/array-day	≥0.148	≥0.090	≥0.177	0.129	0.059	≥0.078
No. amphibians/km-day	≥4.86	≥2.98	≥5.83	4.25	1.93	≥2.57
Turtles						
Florida softshell	0	0	0	0	X	0
Gopher tortoise	X	X	2	0	0	0
Amphisbaenids						
Florida worm lizard	0	0	1	0	0	0
Lizards						
Green anole	5	14	49	13	0	3
Six-lined racerunner	149	104	212	47	50	126
Mole skink	1	5	27	2	5	23
Southeastern five-lined skink	6	1	21	15	0	19
Sand skink	51	26	77	17	16	82
Eastern glass lizard	1	1	1	0	0	0
Florida scrub lizard	328	454	637	135	98	200
Ground skink	X	X	2	X	0	X
Snakes						
Scarlet snake	11	9	10	3	3	6
Racer	16	12	43	12	4	12
Eastern indigo snake	0	0	13	0	0	0
Corn snake	0	0	1	0	0	0
Rat snake	X	0	0	0	0	X
Eastern hognose snake	0	0	1	0	0	0
Scarlet kingsnake	0	0	1	0	0	0
Eastern coachwhip	27	29	20	6	8	18
Florida pine snake	0	0	1	0	0	0
Black swamp snake	0	0	X	0	X	0
Brown snake	X	0	0	0	0	X
Florida crowned snake	4	7	29	9	10	23
Common garter snake	X	0	0	0	0	0
No. reptiles	≥603	≥664	≥1,149	≥260	≥196	≥515
No. reptile species	16	13	20	11	10	13
No. reptiles/array-day	≥0.655	≥0.675	≥0.824	≥0.634	≥0.961	≥0.823
No. reptiles/km-day	≥21.56	≥22.20	≥27.11	≥20.86	≥31.60	≥27.06
No. amphibians and reptiles	≥739	≥753	≥1,396	≥313	≥209	≥564
No. animals/array-day	≥0.803	≥0.765	≥1.001	≥0.763	≥1.025	≥0.901
No. animals/km-day	≥26.42	≥25.17	≥32.94	≥25.11	≥33.70	≥29.64
No. days	92	82	58.08	82	102	78.25
No. array-days	920	984	1,394	410	204	626
Total fence length (m)	304.0	364.8	729.6	152.0	60.8	243.2

[a] Ten 4-fence arrays, with 8 funnel traps and 8 pitfall traps each, trapping intermittently in rosemary scrub at Archbold Biological Station, S of Lake Placid, Highlands Co., 1/89–12/90

[b] Twelve 4-fence arrays, with 8 funnel traps and 8 pitfall traps each, trapping intermittently in rosemary scrub at Hendrie Ranch, NE of Venus, Highlands Co., 3/89–12/90

[c] Twenty-four 4-fence arrays, with 8 funnel traps and 8 pitfall traps each, trapping intermittently in rosemary scrub in Arbuckle WMA, Polk Co., 1/89–12/90

[d] Five 4-fence arrays, with 8 funnel traps and 8 pitfall traps each, trapping intermittently in rosemary scrub in Highlands Hammock State Park, Highlands Co., 5/89–12/90

[e] Two 4-fence arrays, with 8 funnel traps and 8 pitfall traps each, trapping intermittently in rosemary scrub near Josephine Creek, W of Lake Istokpoga, Highlands Co., 1/89–12/90

[f] Eight 4-fence arrays, with 8 funnel traps and 8 pitfall traps each, trapping intermittently in rosemary scrub sites (1 array per site) at Eagle in Polk Co. and at Lakemont, College, Lake June, Bar-D Ranch, Cute, Duffer's, and Church in Highlands Co. 1/89–12/90

Appendix K. Herpetofaunal drift-fence data from xeric and rockland hammock sites in Florida (X denotes a species observed but not captured by drift fences).

Species	Xeric hammock[a]	Xeric hammock[b]	Xeric hammock[c]	Xeric hammock[d]	Xeric hammock[e]	Xeric hammock[f]	Xeric hammock[g]	Xeric hammock[h]	Rockland hammock[i]	Disturbed rockland[j]
Salamanders										
Eastern tiger salamander	0	0	0	0	0	3	0	0	0	0
Dwarf salamander	0	4	0	0	0	0	0	0	0	0
Eastern newt	0	0	1	0	0	0	0	0	0	0
Southeastern slimy salamander	0	0	1	0	0	0	0	0	0	0
Anurans										
Southern cricket frog	0	0	0	0	0	71	306	0	0	0
Oak toad	0	44	0	1	0	1	4	9	3	9
Southern toad	0	25	16	2	8	117	56	180	50	31
Greenhouse frog	2	0	1	0	0	150	25	2	50	6
Eastern narrowmouth toad	1	214	0	5	16	828	43	89	21	33
Green treefrog	X	0	0	0	0	1	0	0	7	3
Pinewoods treefrog	0	4	X	0	0	122	17	2	0	0
Barking treefrog	0	0	0	0	0	118	11	1	0	0
Squirrel treefrog	2	0	0	0	0	21	8	2	6	4
Cuban treefrog	0	0	0	0	0	0	0	0	3	6
Southern chorus frog	0	0	0	0	0	0	0	1	0	0
Little grass frog	0	2	0	0	0	59	25	0	0	0
Ornate chorus frog	0	0	0	0	0	1	0	0	0	0
Gopher frog	0	0	0	0	0	25	32	5	0	0
Bullfrog	0	0	0	0	0	54	0	0	0	0
Bronze frog	0	0	0	0	2	0	0	0	0	0
Pig frog	0	0	0	0	0	23	70	1	0	0
Florida leopard frog	2	1	0	1	0	880	290	26	106	20
Eastern spadefoot	14	843	43	2	8	268	1	65	0	0
Unidentified anuran	0	0	0	0	0	16	6	0	0	0
No. amphibians	21	1,137	62	11	34	2,758	894	383	246	112
No. amphibian species	5	8	5	5	4	17	13	12	8	8
No. amphibians/array-day	n/a	0.738	0.054	0.060	0.087	4.864	1.490	1.008	0.076	0.077
No. amphibians/km-day	n/a	24.27	2.03	2.62	2.87	165.82	50.80		1.27	1.28
Turtles										
Snapping turtle	1	0	0	0	0	0	0	0	0	0
Chicken turtle	0	0	0	0	0	0	1	0	0	0
Gopher tortoise	X	0	1	0	0	0	0	0	0	0
Striped mud turtle	0	0	0	0	0	0	0	0	1	1
Eastern mud turtle	0	1	0	0	0	1	0	0	0	0
Lizards										
Green anole	7	5	45	7	10	23	23	1	19	19
Brown anole	0	0	0	0	0	0	0	0	50	103
Six-lined racerunner	X	74	32	0	0	0	5	0	0	0
Five-lined skink	0	0	3	0	0	0	0	0	0	0
Southeastern five-lined skink	2	51	0	0	2	12	8	5	42	3
Broadhead skink	13	0	5	0	4	0	0	0	0	0
Island glass lizard	0	0	0	0	0	0	0	0	0	1
Eastern glass lizard	1	0	0	0	0	0	0	0	0	0
Southern fence lizard	0	61	5	0	0	10	1	3	0	0
Florida scrub lizard	0	0	0	0	0	0	0	2	0	0
Ground skink	X	25	61	22	3	79	81	1	3	0
Florida reef gecko	0	0	0	0	0	0	0	0	29	0

Appendix K. Continued

Species	Xeric hammock[a]	Xeric hammock[b]	Xeric hammock[c]	Xeric hammock[d]	Xeric hammock[e]	Xeric hammock[f]	Xeric hammock[g]	Xeric hammock[h]	Rockland hammock[i]	Disturbed rockland[j]
Snakes										
Cottonmouth	0	0	0	0	0	0	0	0	0	2
Scarlet snake	0	1	2	0	0	0	6	0	0	0
Racer	1	0	3	2	0	38	36	5	14	14
Eastern diamondback rattlesnake	X	0	0	0	0	0	0	0	0	1
Ringneck snake	0	1	1	0	0	1	0	0	13	0
Eastern indigo snake	0	0	0	0	0	0	1	2	2	0
Corn snake	0	0	0	0	0	3	1	1	0	1
Rat snake	0	0	1	0	0	2	0	0	4	0
Common kingsnake	0	0	0	0	0	0	0	0	0	1
Scarlet kingsnake	0	0	1	2	0	0	0	0	0	0
Eastern coral snake	0	0	4	0	0	3	3	0	4	0
Striped crayfish snake	0	0	0	0	0	0	1	0	0	0
Pine woods snake	0	0	0	0	0	1	0	0	0	0
Black swamp snake	0	3	0	0	0	0	1	0	0	0
Dusky pigmy rattlesnake	0	0	0	0	0	0	0	0	3	6
Short-tailed snake	0	0	1	0	0	0	0	0	0	0
Brown snake	0	0	0	0	0	0	0	0	4	0
Florida redbelly snake	0	0	0	0	1	0	0	0	0	0
Florida crowned snake	0	26	17	0	5	0	1	0	0	0
Eastern ribbon snake	0	0	0	0	0	15	7	0	10	0
Common garter snake	0	1	0	0	0	0	2	0	2	7
No. reptiles	26	249	182	33	25	188	178	20	202	162
No. reptile species	7	11	15	4	6	12	16	8	16	13
No. reptiles/array-day	n/a	0.162	0.159	0.179	0.064	0.332	0.297	0.053	0.063	0.111
No. reptiles/km-day	n/a	5.32	5.96	7.87	2.11	11.30	10.11		1.04	1.85
No. amphibians and reptiles	47	1,386	244	44	59	2,946	1,072	403	448	274
No. animals/array-day	n/a	0.899	0.213	0.239	1.064	5.196	1.787	1.061	0.139	0.188
No. animals/km-day	n/a	29.59	7.99	10.49	4.98	177.13	60.91		2.31	3.13
No. days	n/a	513.67	287	92	195	189	200	380	807.25	486
No. array-days	n/a	1,541	1,148	184	390	567	600	380	3,229	1,458
Total fence length (m)	45.6	91.2	106.4	45.6	60.8	88.0	88.0	n/a	240.0	180.0

[a] Two 3-fence arrays, with 6 funnel traps and 4 pitfall traps each, trapping in xeric hammock on Ft. George Island, Nassau Co. (M. Wingate et al., unpubl. data)

[b] Two 4-fence arrays, with pitfall traps, trapping 11/01/87–7/01/89, and 1 4-fence array, with pitfall traps, trapping 8/10/88–7/01/89 in xeric hammock at Katharine Ordway Preserve, 5 km SE of Melrose, Putnam Co. (Franz et al. 1995)

[c] Two 4-fence arrays, with 8 funnel traps and 8 pitfall traps each, and 2 3-fence arrays, with 6 funnel traps and 4 pitfall traps each, trapping in xeric hammock at Andrews WMA S. of Fanning Springs, Levy Co., 11/18/88–6/28/89 and 4/11/90–6/17/90 (K. Enge and P. Southall, unpubl. data)

[d] Two 3-fence arrays of silt fencing, with 12 funnel traps each, trapping in xeric hammock in Jennings Forest WMA, Clay Co., 5/13/93–8/16/93 and 5/19/93–8/16/93 (S. Stiegler, unpubl. data)

[e] Two 4-fence arrays, with 4 funnel traps and 8 pitfall traps each, trapping in xeric hammock at Eaton Creek in Ocala National Forest, Marion Co., 4/03/75–12/19/75 (Florida Game and Fresh Water Fish Commission 1976)

[f] Three 3-fence arrays of silt fencing, with 12 funnel traps each, trapping in xeric hammock adjacent to May's Prairie at Chinsegut Nature Center, N of Brooksville, Hernando Co., on alternating months, 8/28/95–7/13/96 (K. Wood, unpubl. data)

[g] Three 3-fence arrays of silt fencing, with 12 funnel traps each, trapping in xeric hammock in Chassahowitzka WMA, Hernando Co., on alternating months, 7/06/95–6/20/96 (K. Wood, unpubl. data)

[h] One 2-fence array, with 4 funnel traps and 8 pitfall traps, trapping in xeric hammock in Paynes Creek State Historic Site, Hardee Co., 6/14/94–6/30/94 and 10/01/94–9/30/95 (Hingtgen 1994*d*, 1995*e*)

[i] Four 4-fence arrays (with connected 15-m-long shade cloth arms), with 4 large funnel traps (1/8-inch hardware cloth) each, trapping in rockland hammock in Everglades National Park, Dade Co., 5/84–12/86 (Dalrymple 1988)

[j] Three 4-fence arrays (with connected 15-m-long shade cloth arms), with 4 large funnel traps (1/8-inch hardware cloth) each, trapping in disturbed rockland area dominated by Brazilian pepper in Everglades National Park, Dade Co., 5/84–12/86 (Dalrymple 1988)

Appendix L. Herpetofaunal drift-fence data from mesic hardwood-dominated sites in Florida (X denotes a species observed but not captured by drift fences).

Species	Upland hardwood[a]	Upland hardwood[b]	Upland hardwood[c]	Upland hardwood[d]	Upland hardwood[e]	Upland mixed[f]	Slope forest[g]	Upland mixed[h]	Upland mixed[i]	Upland mixed[j]	Upland mixed[k]
Salamanders											
Marbled salamander	0	0	0	1	264	0	0	0	0	0	0
Mole salamander	0	0	0	0	22	59	0	1	0	0	0
One-toed amphiuma	0	2	0	0	0	0	0	0	0	0	0
Apalachicola dusky salamander	45	104	0	3	0	0	0	0	0	0	0
Southern two-lined salamander	428	459	0	132	1	0	0	0	0	0	0
Three-lined salamander	1	1,000	6	151	0	0	0	0	0	0	0
Dwarf salamander	0	0	0	0	0	1	51	0	0	0	0
Four-toed salamander	0	1	0	7	0	0	0	0	0	0	0
Striped newt	0	0	0	0	0	0	0	0	1	0	0
Eastern newt	0	33	1	14	1	5	2	6	0	0	0
Southeastern slimy salamander	42	13	1	86	18	6	24	0	0	0	0
Eastern mud salamander	0	0	0	0	0	0	8	0	0	0	0
Southern red salamander	3	52	0	4	0	0	0	0	0	0	0
Unidentified	0	0	0	1	0	0	0	0	0	0	0
Anurans											
Northern cricket frog	0	0	0	7	0	0	0	0	0	0	0
Southern cricket frog	0	11	0	0	8	0	3	28	0	0	0
Oak toad	0	0	0	0	0	4	0	1	0	0	0
Southern toad	22	48	34	288	28	14	49	23	13	3	170
Greenhouse frog	0	0	0	1	0	0	0	0	438	66	87
Eastern narrowmouth toad	0	26	54	23	20	325	4	73	22	115	334
Bird-voiced treefrog	0	0	X	0	0	0	0	0	0	0	0
Cope's gray treefrog	0	2	X	X	1	1	0	0	0	1	0
Green treefrog	0	5	0	15	2	0	0	7	1	1	4
Pinewoods treefrog	X	0	0	0	0	0	0	25	1	0	2
Barking treefrog	0	0	0	0	0	0	0	1	0	0	0
Squirrel treefrog	0	1	X	6	0	5	0	47	0	12	4
Spring peeper	1	11	X	1	2	2	10	1	0	0	0
Southern chorus frog	0	0	0	0	0	0	0	1	0	0	0
Little grass frog	0	X	0	0	0	0	0	7	0	0	0
Bullfrog	1	0	X	11	2	0	0	0	2	5	0
Bronze frog	17	201	1	20	6	0	12	0	0	0	0
Pig frog	0	0	X	0	0	0	0	0	1	0	2
River frog	0	0	X	0	0	0	0	0	0	0	0
Florida leopard frog	2	181	X	38	9	22	9	100	16	86	427
Eastern spadefoot	0	19	104	0	24	239	1	39	17	0	164
Unidentified anuran	0	0	0	2	0	0	0	6	0	1	0
No. amphibians	562	2,169	201	811	408	683	173	366	512	290	1,194
No. amphibian species	10	18	7	18	15	12	11	15	10	8	9
No. amphibians/array-day	0.650	1.674	0.684	0.741	0.168	0.742	0.137	0.797	1.103	0.483	0.503
No. amphibians/km-day	22.78	57.71	29.99	32.48	6.79	24.42	5.15	34.97	36.30	16.48	22.07

Appendix L. Continued.

Species	Upland hardwood[a]	Upland hardwood[b]	Upland hardwood[c]	Upland hardwood[d]	Upland hardwood[e]	Upland mixed[f]	Slope forest[g]	Upland mixed[h]	Upland mixed[i]	Upland mixed[j]	Upland mixed[k]
Turtles											
Snapping turtle	0	10	0	X	0	0	1	0	0	0	0
Chicken turtle	0	0	0	0	0	5	0	0	0	0	1
Striped mud turtle	0	0	0	0	0	0	X	0	0	3	9
Eastern mud turtle	0	22	0	3	0	0	1	0	0	2	1
Common musk turtle	0	0	0	0	0	0	0	0	0	0	7
Eastern box turtle	1	X	X	5	0	1	0	0	0	0	1
Slider	0	0	0	1	0	0	0	0	0	0	0
Lizards											
Green anole	28	29	6	21	12	8	17	2	9	9	11
Brown anole	0	0	0	0	0	0	0	0	0	0	1
Six-lined racerunner	0	0	0	0	4	23	0	1	0	0	2
Five-lined skink	0	4	X	2	0	0	1	1	0	0	0
Southeastern five-lined skink	0	0	1	0	0	1	0	1	0	21	30
Broadhead skink	147	9	3	13	2	15	8	20	0	21	0
Eastern glass lizard	0	0	0	0	0	2	0	0	0	0	4
Southern fence lizard	1	0	0	0	0	18	1	2	0	0	13
Ground skink	18	6	3	38	1	66	39	9	16	114	151
Unidentified lizard	1	0	0	0	0	0	0	0	0	1	0
Snakes											
Southern copperhead	2	0	0	0	0	0	0	0	0	0	0
Cottonmouth	1	1	0	1	0	0	0	0	0	0	0
Scarlet snake	0	0	0	1	0	13	0	1	0	0	0
Racer	11	11	1	2	2	29	8	4	0	11	17
Ringneck snake	10	13	1	9	0	0	1	0	0	3	8
Corn snake	1	0	0	X	0	1	0	0	0	1	1
Rat snake	4	1	X	1	1	0	2	2	0	3	3
Eastern mud snake	0	2	0	0	0	0	0	0	0	1	1
Eastern hognose snake	1	0	0	0	0	0	0	0	0	0	1
Southern hognose snake	0	0	0	0	0	11	0	0	0	0	0
Common kingsnake	0	0	0	0	0	1	0	0	0	0	0
Scarlet kingsnake	0	0	0	0	0	2	1	1	0	0	0
Eastern coachwhip	1	0	0	0	0	1	0	0	0	0	0
Eastern coral snake	0	0	0	0	0	1	X	0	0	8	2
Plainbelly water snake	0	0	1	0	0	0	0	0	0	0	0
Southern water snake	7	1	1	0	0	1	0	0	0	0	0
Striped crayfish snake	0	0	0	0	0	0	0	0	0	0	1
Queen snake	1	0	0	0	0	0	0	0	0	0	0
Black swamp snake	0	0	0	0	0	0	0	0	0	0	2
Dusky pigmy rattlesnake	1	0	0	0	0	2	1	1	0	0	0
Florida redbelly snake	2	5	0	3	0	1	3	6	0	12	0
Florida crowned snake	0	0	0	0	0	0	0	0	0	0	8
Eastern ribbon snake	0	0	0	0	0	3	0	0	0	11	3
Common garter snake	1	0	0	3	0	8	1	1	0	0	4
Eastern earth snake	0	0	1	0	0	0	0	0	0	0	0
Unidentified snake	0	0	0	0	0	0	0	0	0	1	0

Appendix L. Continued.

Species	Upland hardwood[a]	Upland hardwood[b]	Upland hardwood[c]	Upland hardwood[d]	Upland hardwood[e]	Upland mixed[f]	Slope forest[g]	Upland mixed[h]	Upland mixed[i]	Upland mixed[j]	Upland mixed[k]
No. reptiles	239	114	18	103	22	213	85	52	25	222	282
No. reptile species	18	13	9	14	6	22	15	14	2	14	24
No. reptiles/array-day	0.277	0.088	0.061	0.094	0.009	0.232	0.067	0.113	0.054	0.370	0.119
No. reptiles/km-day	9.69	3.03	2.69	4.13	0.15	7.62	2.53	4.97	1.77	12.61	5.21
No. amphibians and reptiles	801	2,283	219	914	430	896	258	418	537	512	1,476
No. animals/array-day	0.927	1.762	0.745	0.835	0.177	1.232	0.204	0.911	1.157	0.853	0.622
No. animals/km-day	32.47	60.74	32.67	36.61	2.99	32.04	7.67	39.94	38.07	29.09	27.28
No. days	216	216	147	365	1,582	230	316	153	232	200	339
No. array-days	864	1,296	294	1,095	2,430	920	1,264	459	464	600	2,373
Total fence length (m)	114.2	174.0	45.6	68.4	38.0	121.6	106.4	68.4	60.8	88.0	159.6

[a] Four 3-fence arrays of silt fencing, with 12 funnel traps each, trapping on alternating months in hardwood forests along steephead ravine streams feeding into Big Sweetwater Creek in Robert Brent WMA, Liberty Co., 6/06/95–06/05/96 (K. Enge, unpubl. data)

[b] Six 3-fence arrays of silt fencing, with 12 funnel traps each, trapping on alternating months in hardwood forests along steephead ravine streams S of Lake Talquin in Talquin WMA, Leon Co., 6/06/95–06/05/96 (K. Enge, unpubl. data)

[c] Two 3-fence arrays, with 6 funnel traps and 4 pitfall traps each, trapping in upland hardwood forest at Rock Bluff in Apalachicola National Forest, Leon Co., 12/27/89–3/28/90 and 5/02/90–6/27/90 (K. Enge and D. Runde, unpubl. data)

[d] Three 3-fence arrays of silt fencing, with 12 funnel traps each, trapping in upland hardwood forest with streams and spring seeps W of Havana, Gadsden Co., 6/19/94–6/19/95 (Enge 1997*b*)

[e] Two 2-fence arrays in an "L" or "T" pattern, with 4 funnel traps and 4 pitfall traps (i.e., cans) each, trapping 10/12/78–2/06/81, and 1 7.6-m-long fence, with 3 traps, trapping 4/14/76–4/18/78 in upland hardwood forest at Tall Timbers Research Station, Leon Co. (Means and Campbell 1982)

[f] Four 4-fence arrays, with 8 funnel traps and 8 pitfall traps each, trapping in upland mixed forest dominated by loblolly pines and cabbage palms (*Sabal palmetto*) in St. Marks National Wildlife Refuge, Wakulla Co., 12/06/78–7/25/79 (U.S. Fish and Wildlife Service 1980)

[g] Two 4-fence arrays, with 8 funnel traps and 8 pitfall traps each, and 2 3-fence arrays, with 6 funnel traps and 4 pitfall traps each, trapping in a slope forest in Big Shoals WMA, Hamilton Co., 11/07/88–7/12/89 and 4/09/90–6/17/90 (K. Enge and P. Southall, unpubl. data)

[h] Three 3-fence arrays, with 9 funnel traps and 1 pitfall trap each, trapping in upland mixed forest in Spring Creek Unit of Big Bend WMA, Taylor Co., 5/29/92–10/29/92 (Enge and Wood 1998)

[i] Two 4-fence arrays, with 4 funnel traps and 8 pitfall traps each, trapping in upland mixed forest at Heather Island in Ocala National Forest, Marion Co., 4/03/75–12/19/75 (Florida Game and Fresh Water Fish Commission 1976)

[j] Three 3-fence arrays of silt fencing, with 12 funnel traps each, trapping in upland mixed forest in Chassahowitzka WMA, Hernando Co., on alternating months, 7/06/95–6/20/96 (K. Wood, unpubl. data)

[k] Seven 3-fence arrays, with 6 funnel traps and 4 pitfall traps each, trapping in upland mixed forest N of Lake Thonotosassa, Hillsborough Co., 1/11/91–12/16/91 (Joiner and Godwin 1992*d*)

Appendix M. Herpetofaunal drift-fence data from hydric hammock sites in Florida (X denotes a species observed but not captured by drift fences).

Species	Hydric hammock[a]	Hydric hammock[b]	Hydric hammock[c]	Hydric hammock[d]	Hydric hammock[e]	Hydric hammock[f]	Hydric hammock[g]	Hydric hammock[h]
Salamanders								
Two-toed amphiuma	0	5	0	0	X	1	X	2
One-toed amphiuma	0	14	0	0	0	0	0	11
Dwarf salamander	2	1	0	0	0	0	0	1
Eastern newt	0	1	0	0	14	0	1	1
Southeastern slimy salamander	1	0	0	3	19	0	0	0
Northern dwarf siren	0	1	0	0	0	0	0	0
Eastern lesser siren	0	1	0	0	X	0	0	0
Unidentified siren	0	1	0	0	0	0	0	0
Anurans								
Southern cricket frog	0	1	0	0	0	0	0	0
Oak toad	4	0	0	0	0	0	5	0
Southern toad	9	9	5	5	3	26	54	6
Greenhouse frog	0	0	0	0	20	18	38	0
Eastern narrowmouth toad	94	88	35	47	3	104	77	162
Cope's gray treefrog	1	1	0	0	0	0	X	1
Green treefrog	8	6	0	0	1	4	2	0
Pinewoods treefrog	0	0	0	0	0	0	4	0
Squirrel treefrog	7	6	6	0	2	4	1	2
Spring peeper	0	0	0	1	0	0	1	0
Southern chorus frog	0	0	X	0	0	0	0	0
Little grass frog	0	0	0	1	0	0	0	1
Bullfrog	1	5	0	0	1	1	2	40
Bronze frog	0	0	0	2	0	0	0	0
Pig frog	0	0	0	0	0	0	3	0
Florida leopard frog	100	181	40	4	20	138	162	199
Eastern spadefoot	0	0	4	18	3	80	327	0
Unidentified anuran	0	5	0	0	0	0	0	2
No. amphibians	227	326	90	81	86	376	677	428
No. amphibian species	10	14	5	8	10	9	13	11
No. amphibians/array-day	0.491	0.355	0.103	0.155	0.151	0.251	0.574	0.713
No. amphibians/km-day	16.16	15.71	4.53	5.10	10.06	8.27	18.87	24.32
Turtles								
Florida softshell	0	0	0	0	0	0	3	0
Snapping turtle	0	0	0	0	0	X	0	0
Gopher tortoise	0	0	0	0	0	X	0	0
Striped mud turtle	0	6	0	1	0	5	0	12
Eastern mud turtle	1	6	0	0	0	0	1	4
Loggerhead musk turtle	0	0	0	0	X	0	0	0
Common musk turtle	0	0	0	0	2	0	0	0
Eastern box turtle	0	X	0	0	0	X	2	X
Yellowbelly slider	0	X	0	0	0	0	0	0
Crocodilians								
American alligator	0	0	0	0	X	0	0	1
Lizards								
Green anole	1	2	2	7	0	17	4	8
Brown anole	0	0	0	0	0	1	0	0
Six-lined racerunner	0	0	1	0	0	0	2	0
Five-lined skink	0	7	4	0	0	12	0	0
Southeastern five-lined skink	0	0	1	0	2	5	9	30
Broadhead skink	27	26	21	1	2	17	11	8
Eastern glass lizard	0	0	3	0	0	0	0	0
Ground skink	65	10	4	20	15	16	14	122
Unidentified lizard	0	0	2	0	0	0	0	0
Snakes								
Scarlet snake	8	3	3	0	0	0	0	1
Racer	7	1	1	0	5	3	1	0
Eastern diamondback rattlesnake	0	X	0	0	0	0	0	0
Ringneck snake	6	1	0	3	0	0	2	10
Eastern indigo snake	0	0	0	0	0	0	X	0
Corn snake	0	0	0	0	0	1	X	3

Appendix M. Continued.

Species	Hydric hammock[a]	Hydric hammock[b]	Hydric hammock[c]	Hydric hammock[d]	Hydric hammock[e]	Hydric hammock[f]	Hydric hammock[g]	Hydric hammock[h]
Snakes (continued)								
Rat snake	0	3	2	0	1	4	0	5
Eastern mud snake	0	0	0	0	0	2	0	2
Eastern hognose snake	0	0	0	0	0	5	0	0
Common kingsnake	1	0	0	0	0	0	0	0
Scarlet kingsnake	1	4	1	0	0	0	1	4
Eastern coachwhip	0	0	0	3	0	0	0	0
Eastern coral snake	0	0	0	0	2	1	1	2
Southern water snake	1	1	0	0	0	0	0	1
Florida green water snake	0	0	0	0	0	0	1	0
Rough green snake	0	0	0	0	0	0	0	0
Brown water snake	0	2	0	0	X	3	0	0
Black swamp snake	0	0	0	0	0	0	3	0
Dusky pigmy rattlesnake	0	1	2	1	0	0	0	0
Florida redbelly snake	6	1	0	1	1	2	2	14
Eastern ribbon snake	8	3	0	0	1	19	1	29
Common garter snake	12	10	1	2	0	2	0	0
Unidentified snake	0	0	0	0	0	1	0	0
No. reptiles	144	87	48	39	31	116	58	256
No. reptile species	13	17	13	9	9	17	16	17
No. reptiles/array-day	0.312	0.095	0.055	0.075	0.054	0.078	0.049	0.427
No. reptiles/km-day	10.25	4.19	2.41	2.46	3.63	2.55	1.62	14.54
No. amphibians and reptiles	371	413	138	120	117	492	735	684
No. animals/array-day	0.803	0.450	0.158	0.230	0.205	0.329	0.623	1.140
No. animals/km-day	26.42	19.91	6.94	7.56	13.68	10.82	20.49	38.86
No. days	231	153	218	261	285	374	295	200
No. array-days	462	918	872	522	570	1,496	1,180	600
Total fence length (m)	60.8	135.6	91.2	60.8	30.0	121.6	121.6	88.0

[a] Two 4-fence arrays, with 8 funnel traps and 8 pitfall traps each, trapping in a hydric hammock in St. Marks National Wildlife Refuge, Wakulla Co., 12/06/78–7/25/79 (U.S. Fish and Wildlife Service 1980)

[b] Three 3-fence arrays of silt fencing, with 12 funnel traps each, and 3 3-fence arrays of galvanized valley, with 9 funnel traps and 1 pitfall trap each, trapping in inland and coastal hydric hammocks, respectively, in Spring Creek Unit of Big Bend WMA, Taylor Co., 5/29/92–10/29/92 (Enge and Wood 1998)

[c] Four 3-fence arrays, with 9 funnel traps and 1 pitfall trap each, trapping in inland and coastal hydric hammocks in Tide Swamp Unit of Big Bend WMA, Taylor Co., 3/29/93–10/29/93 (Enge and Wood 1998)

[d] Two 4-fence arrays, with 4 funnel traps and 8 pitfall traps each, trapping in a hydric hammock at Lake Charles in Ocala National Forest, Marion Co., 3/31/75–10/18/75 (Florida Game and Fresh Water Fish Commission 1976)

[e] Two 15-m-long silt fences, with 6 funnel traps each, trapping in a hydric hammock N of Dunnellon, Marion Co., 12/20/90–9/23/91 (Joiner and Godwin 1992*e*)

[f] Four 3-fence arrays, with 6 funnel traps and 4 pitfall traps each, trapping in hydric hammocks W and N of Crystal River, Citrus Co., 12/04/90–12/13/91 (Joiner and Godwin 1992*a*)

[g] Four 3-fence arrays, with 6 funnel traps and 4 pitfall traps each, trapping in hydric hammocks E of Lake Panasoffkee, Sumter Co., 2/21/91–12/13/91 (Joiner and Godwin 1992*b*)

[h] Three 3-fence arrays of silt fencing, with 12 funnel traps each, trapping in hydric hammocks in Chassahowitzka WMA, Hernando Co., on alternating months, 7/06/95–6/20/96 (K. Wood, unpubl. data)

Appendix N. Herpetofaunal drift-fence data from forested wetland sites in Florida (X denotes a species observed but not captured by drift fences).

Species	Bottomland forest[a]	Bottomland forest[b]	Bottomland forest[c]	Basin swamp[d]	Basin swamp[e]	Basin swamp[f]	Floodplain swamp[g]	Floodplain swamp[h]	Floodplain swamp[i]	Floodplain swamp[j]	Floodplain swamp[k]
Salamanders											
Marbled salamander	0	0	32	0	0	0	0	0	0	0	0
Two-toed amphiuma	0	0	3	9	0	57	11	14	53	0	6
One-toed amphiuma	0	0	0	7	1	12	0	0	0	0	0
Apalachicola dusky salamander	5	63	0	0	0	0	0	0	0	0	0
Southern two-lined salamander	11	118	0	0	0	0	0	0	0	0	0
Three-lined salamander	10	1	X	0	0	0	0	0	0	0	0
Dwarf salamander	0	0	0	3	0	8	0	0	0	0	0
Eastern newt	0	0	61	24	5	114	3	0	403	0	14
Southeastern slimy salamander	10	2	5	0	0	0	10	0	0	0	0
Northern/southern dwarf siren	0	0	0	1	0	1	0	0	2	0	1
Eastern mud salamander	0	45	0	0	0	0	0	0	0	0	0
Southern red salamander	2	15	0	0	0	0	0	0	0	0	0
Eastern lesser siren	0	0	0	8	0	1	0	3	3	0	5
Greater siren	0	0	0	1	0	0	0	7	8	1	15
Unidentified siren	0	0	1	6	0	0	0	0	0	0	0
Anurans											
Southern cricket frog	0	0	17	3	0	1	0	2	0	0	0
Southern toad	3	13	137	21	5	28	0	1	9	29	64
Greenhouse frog	0	0	0	0	0	1	11	0	1	29	5
Eastern narrowmouth toad	12	0	606	34	18	57	1	0	21	86	260
Bird-voiced treefrog	0	0	1	0	0	0	0	0	0	0	0
Cope's gray treefrog	0	7	15	0	X	0	0	1	0	0	0
Green treefrog	0	0	3	1	0	0	0	0	4	X	9
Pinewoods treefrog	0	X	0	1	0	0	0	0	X	2	5
Squirrel treefrog	0	0	3	0	3	2	0	0	1	6	8
Spring peeper	0	14	54	X	0	0	0	0	4	0	0
Little grass frog	0	0	0	0	0	1	0	X	0	0	4
Ornate chorus frog	0	0	0	2	0	0	0	0	0	0	0
Gopher frog	0	0	0	0	0	0	1	0	0	0	0
Bullfrog	0	2	9	7	1	18	1	5	1	0	1
Bronze frog	17	105	72	0	2	0	0	0	0	0	0
Pig frog	0	0	3	0	0	0	0	1	0	3	4
River frog	0	0	1	0	0	0	0	0	0	0	0
Florida leopard frog	0	2	8	87	113	302	14	63	102	30	702
Eastern spadefoot	8	1	37	5	2	0	0	0	0	16	4
Unidentified anuran	0	0	7	0	1	2	0	0	0	0	0
No. amphibians	78	388	1,075	220	151	605	52	97	612	202	1,107
No. amphibian species	9	13	18	16	9	14	8	9	13	9	16
No. amphibians/array-day	0.520	0.898	0.523	0.479	0.346	1.008	0.091	0.180	1.672	0.365	0.521
No. amphibians/km-day	34.21	31.29	19.66	21.02	15.19	34.38	6.08	11.98	111.48	24.31	34.73
Turtles											
Florida softshell	0	0	0	0	0	0	3	0	0	0	0
Snapping turtle	0	3	2	0	0	0	0	0	1	0	0

Appendix N. Continued.

Species	Bottomland forest[a]	Bottomland forest[b]	Bottomland forest[c]	Basin swamp[d]	Basin swamp[e]	Basin swamp[f]	Floodplain swamp[g]	Floodplain swamp[h]	Floodplain swamp[i]	Floodplain swamp[j]	Floodplain swamp[k]
Turtles (continued)											
Chicken turtle	0	0	0	0	0	0	0	0	0	0	X
Striped mud turtle	0	0	0	3	6	41	X	0	8	10	41
Eastern mud turtle	0	6	12	7	2	1	0	0	0	1	4
Cooter	0	0	0	0	0	0	0	1	0	0	0
Florida redbelly turtle	0	0	0	0	0	0	0	1	0	0	X
Loggerhead musk turtle	0	0	0	0	0	0	0	1	0	0	0
Common musk turtle	0	0	0	2	0	18	0	6	11	0	1
Eastern box turtle	0	0	11	X	0	0	0	0	0	0	0
Crocodilians											
American alligator	0	0	0	0	0	1	0	0	0	0	0
Lizards											
Green anole	4	2	35	1	0	4	0	X	X	5	0
Six-lined racerunner	0	0	0	0	0	0	0	0	0	0	1
Five-lined skink	0	0	31	0	0	0	0	0	0	0	0
Southeastern five-lined skink	2	0	3	0	0	0	0	7	1	5	9
Broadhead skink	0	5	29	3	1	2	0	0	0	0	0
Eastern glass lizard	0	0	0	0	1	0	0	0	0	0	10
Southern fence lizard	0	0	0	0	0	0	0	0	0	0	X
Ground skink	3	0	20	0	0	73	3	0	0	52	54
Unidentified lizard	0	0	2	0	0	0	0	0	0	0	0
Snakes											
Southern copperhead	0	3	0	0	0	0	0	0	0	0	0
Cottonmouth	0	2	X	0	1	1	0	0	1	2	0
Scarlet snake	0	1	0	0	0	0	0	0	0	1	0
Racer	0	1	13	1	1	3	1	0	X	0	8
Ringneck snake	0	3	3	1	0	7	1	0	0	X	5
Corn snake	0	1	1	0	0	0	0	0	0	0	1
Rat snake	0	0	X	2	1	4	0	1	0	1	1
Eastern mud snake	0	0	0	2	1	5	0	0	5	0	1
Eastern hognose snake	0	0	0	0	0	0	0	0	0	0	2
Scarlet kingsnake	0	0	0	0	1	0	0	0	0	0	0
Eastern coral snake	0	0	0	0	0	2	2	0	0	0	1
Southern water snake	0	3	0	0	1	0	0	0	X	1	10
Florida green water snake	0	0	0	0	0	0	0	0	X	0	0
Brown water snake	0	0	0	0	0	0	0	0	1	0	0
Striped crayfish snake	0	0	0	0	0	0	0	0	X	0	5
Queen snake	0	3	0	0	0	0	0	0	0	0	0
Pine woods snake	0	0	0	0	0	0	0	0	0	1	0
Black swamp snake	0	0	0	0	0	0	0	0	0	0	3
Dusky pigmy rattlesnake	0	0	0	1	1	0	0	0	0	0	0
Florida redbelly snake	0	1	2	1	0	7	4	0	0	0	0
Eastern ribbon snake	0	0	0	0	0	14	0	0	1	7	9
Common garter snake	0	0	2	0	1	0	0	0	0	0	3
Eastern earth snake	0	0	2	0	0	0	0	0	0	0	0
Unidentified snake	0	0	1	0	0	1	0	0	0	0	0

Appendix N. Continued.

Species	Bottomland forest[a]	Bottomland forest[b]	Bottomland forest[c]	Basin swamp[d]	Basin swamp[e]	Basin swamp[f]	Floodplain swamp[g]	Floodplain swamp[h]	Floodplain swamp[i]	Floodplain swamp[j]	Floodplain swamp[k]
No. reptiles	9	34	169	24	18	184	14	17	29	86	169
No. reptile species	3	13	14	11	12	15	6	6	9	11	19
No. reptiles/array-day	0.060	0.079	0.082	0.052	0.041	0.307	0.025	0.031	0.079	0.155	0.080
No. reptiles/km-day	3.95	2.74	3.09	2.29	1.81	10.45	1.64	2.10	5.28	10.35	5.30
No. amphibians and reptiles	87	422	1,244	244	169	789	66	114	641	288	1,276
No. animals/array-day	0.580	0.977	0.605	0.531	0.388	1.315	0.116	0.211	01.751	0.520	0.600
No. animals/km-day	38.16	34.04	22.75	23.32	17.00	44.83	7.72	14.07	116.76	34.66	40.03
No. days	37.5	216	514	153	218	200	285	135	91.5	277	265.6
No. array-days	150	432	2,056	459	436	600	570	540	366	554	2,125
Total fence length (m)	60.8	57.4	106.4	68.4	45.6	88.0	30.0	60.0	60.0	30.0	120.0

[a] Four 2-fence arrays in an "L" or "T" pattern, with 4 funnel traps and 4 pitfall traps each, trapping in bottomland forest along ravines in the Rock Creek Tract of Torreya State Park, Liberty Co., 5/25/94–7/1/94 (Means and Studenroth 1994)

[b] Two 3-fence arrays of silt fencing, with 12 funnel traps each, trapping on alternating months in bottomland forest along Big Sweetwater Creek's ravine in Robert Brent WMA, Liberty Co., 6/06/95–06/05/96 (K. Enge, unpubl. data)

[c] Two 4-fence arrays, with 8 funnel traps and 8 pitfall traps each, and 2 3-fence arrays, with 6 funnel traps and 4 pitfall traps each, trapping in bottomland forest in Joe Budd WMA SE of Quincy, Gadsden Co., 2/02/89–6/26/89 and 10/18/89–10/23/90 (K. Enge and D. Runde, unpubl. data)

[d] Three 3-fence arrays of silt fencing, with 12 funnel traps each, trapping in basin swamps in Spring Creek Unit of Big Bend WMA, Taylor Co., 5/29/92–10/29/92 (Enge and Wood 1998)

[e] Two 3-fence arrays of silt fencing, with 12 funnel traps each, trapping in basin swamps in Tide Swamp Unit of Big Bend WMA, Taylor Co., 3/25/93–10/29/93 (Enge and Wood 1998)

[f] Three 3-fence arrays of silt fencing, with 12 funnel traps each, trapping in basin swamps in Chassahowitzka WMA, Hernando Co., on alternating months, 7/06/95–6/20/96 (K. Wood, unpubl. data)

[g] Two 15-m-long silt fences, with 6 funnel traps each, trapping in a floodplain swamp N of Dunnellon, Marion Co., 12/12/90–9/23/91 (Joiner and Godwin 1992*e*)

[h] Four 15-m-long silt fences, with 6 funnel traps each, trapping partially in a spring-run stream and a floodplain swamp E of Lake Panasoffkee, Sumter Co., 8/01/91–12/13/91 (Joiner and Godwin 1992*b*)

[i] Four 15-m-long silt fences, with 6 funnel traps each, trapping in a floodplain swamp E of Lake Panasoffkee, Sumter Co., 3/01/91–5/01/91 and 3/01/91–7/01/91 (Joiner and Godwin 1992*b*)

[j] Two 15-m-long silt fences, with 6 funnel traps each, trapping in a floodplain swamp E of Lake Tarpon, Pinellas Co., 1/05/91–8/01/91 and 9/30/91–12/17/91 (Joiner and Godwin 1992*c*)

[k] Eight 15-m-long silt fences, with 6 funnel traps each, trapping in a floodplain swamp SW of Lake Thonotosassa, Hillsborough Co., 1/11/91–12/16/91, but closed during high-water conditions (Joiner and Godwin 1992*d*)

Appendix O. Herpetofaunal drift-fence data from cypress-dominated sites in Florida (X denotes a species observed but not captured by drift fences).

Species	Dome swamp[a]	Dome swamp[b]	Dome swamp[c]	Dome swamp[d]	Dome swamp[e]	Strand swamp[f]	Cypress lake[g]
Salamanders							
Flatwoods salamander	2	0	0	0	0	0	0
Mole salamander	0	1	0	0	0	0	0
Two-toed amphiuma	9	15	0	37	0	22	3
One-toed amphiuma	0	2	1	0	0	0	0
Southern dusky salamander	4	0	0	0	0	0	0
Dwarf salamander	5	2	0	0	0	0	0
Eastern newt	29	109	0	33	0	35	24
Northern dwarf siren	13	6	0	12	0	0	0
Mud salamander	0	0	0	0	0	0	1
Eastern lesser siren	9	0	0	10	0	3	0
Greater siren	7	2	0	2	0	4	6
Unidentified siren	0	4	0	0	0	0	0
Anurans							
Southern cricket frog	21	0	0	50	0	28	0
Oak toad	13	0	2	0	0	0	0
Southern toad	68	16	3	10	5	24	0
Greenhouse frog	0	0	0	10	2	27	0
Eastern narrowmouth toad	5	31	16	6	12	57	0
Cope's gray treefrog	0	1	0	0	0	0	0
Green treefrog	0	2	0	0	1	2	6
Pinewoods treefrog	35	1	0	4	2	1	0
Squirrel treefrog	0	1	1	2	4	6	0
Southern chorus frog	0	1	0	0	0	X	0
Little grass frog	56	0	0	0	0	X	0
Gopher frog	1	0	0	2	0	0	0
Bullfrog	0	3	0	5	0	3	0
Pig frog	8	0	0	1	2	10	0
River frog	1	0	0	0	0	0	0
Florida leopard frog	251	83	12	481	17	119	9
Eastern spadefoot	0	0	1	0	14	5	0
Unidentified anuran	0	5	1	3	0	0	0
No. amphibians	537	285	37	668	59	346	49
No. amphibian species	18	16	7	15	9	15	6
No. amphibians/array-day	0.085	0.621	0.123	1.113	0.217	0.279	0.086
No. amphibians/km-day	1.87	27.23	5.41	37.95	14.46	18.59	5.71
Turtles							
Snapping turtle	1	1	0	0	0	0	0
Chicken turtle	1	0	0	0	0	0	0
Striped mud turtle	28	3	0	6	1	25	1
Eastern mud turtle	6	15	2	8	1	1	0
Common musk turtle	4	1	0	6	0	9	1
Eastern box turtle	3	X	X	0	0	X	0
Crocodilians							
American alligator	0	0	0	1	0	0	0
Lizards							
Green anole	9	0	0	1	0	1	1
Six-lined racerunner	1	0	2	0	0	0	0
Five-lined skink	8	5	3	0	0	0	0
Southeastern five-lined skink	2	0	0	15	19	17	2
Broadhead skink	1	14	11	2	0	0	0
Eastern glass lizard	3	4	0	0	0	0	0
Ground skink	1	4	2	15	2	40	0
Unidentified lizard	0	0	0	1	0	0	0
Snakes							
Cottonmouth	13	0	1	0	0	7	0
Scarlet snake	0	1	0	2	0	2	0
Racer	14	1	2	9	3	4	0
Eastern diamondback rattlesnake	0	0	0	0	0	1	0
Ringneck snake	0	0	0	0	1	3	0
Corn snake	0	0	0	0	0	1	0

Appendix O. Continued.

Species	Dome swamp[a]	Dome swamp[b]	Dome swamp[c]	Dome swamp[d]	Dome swamp[e]	Strand swamp[f]	Cypress lake[g]
Snakes (continued)							
Rat snake	0	1	0	0	0	3	0
Eastern mud snake	0	2	0	12	0	4	0
Eastern hognose snake	2	0	0	0	0	0	0
Scarlet kingsnake	0	0	1	0	0	0	0
Eastern coral snake	0	0	0	1	0	0	0
Southern water snake	1	0	1	2	0	1	0
Striped crayfish snake	1	0	0	5	0	2	0
Glossy crayfish snake	3	2	0	0	0	0	0
Black swamp snake	0	3	0	0	0	0	0
Dusky pigmy rattlesnake	0	2	0	0	0	1	0
Florida redbelly snake	0	1	0	0	0	0	0
Eastern ribbon snake	1	3	2	7	0	13	0
Common garter snake	3	0	2	0	1	4	0
Unidentified snake	0	2	0	0	0	0	0
No. reptiles	106	65	29	93	28	139	5
No. reptile species	21	17	11	15	7	19	4
No. reptiles/array-day	0.017	0.142	0.097	0.155	0.103	0.112	0.009
No. reptiles/km-day	0.37	6.21	4.24	5.28	6.86	7.47	0.58
No. amphibians and reptiles	643	350	66	761	87	485	54
No. animals/array-day	0.102	0.763	0.220	1.268	0.320	0.391	0.094
No. animals/km-day	2.24	33.44	9.65	43.24	21.32	26.05	6.29
No. days	315	153	218	200	272	248.2	286
No. array-days	6,300	459	418	600	272	1,241	572
Total fence length (m)	912.0	68.4	45.6	88.0	15.0	75.0	30.0

[a] Thirty 4-fence arrays (with connected polyethylene plastic arms), with 8 funnel traps each, trapping in 6 dome swamps and surrounding flatwoods W of Starke, Bradford Co., 5/08/79–12/04/79 (Vickers et al. 1985)

[b] Three 3-fence arrays of silt fencing, with 12 funnel traps each, trapping in 3 dome swamps in Spring Creek Unit of Big Bend WMA, Taylor Co., 5/29/92–10/29/92 (Enge and Wood 1998)

[c] Two 3-fence arrays of silt fencing, with 12 funnel traps each, trapping in 2 dome swamps in Tide Swamp Unit of Big Bend WMA, Taylor Co., 3/25/93–10/29/93 (Enge and Wood 1998)

[d] Three 3-fence arrays of silt fencing, with 12 funnel traps each, trapping in 3 dome swamps in Chassahowitzka WMA, Hernando Co., on alternating months, 7/06/95–6/20/96 (K. Wood, unpubl. data)

[e] One 15-m-long silt fence, with 6 funnel traps, in a dome swamp E of Lake Tarpon, Pinellas Co., 1/05/91–8/1/91 and 10/04/91–12/17/91 (Joiner and Godwin 1992*c*)

[f] Five 15-m-long silt fences, with 6 funnel traps each, trapping in strand swamps E of Lake Tarpon, Pinellas Co., 1/05/91–12/17/91, but closed during high water (Joiner and Godwin 1992*c*)

[g] Two 15-m-long silt fences, with 6 funnel traps each, trapping in cypress swamp along the shore of Lake Istokpoga, Highlands Co., 7/15/91–4/27/92 (D. Moxley et al., unpubl. data)

Appendix P. Herpetofaunal drift-fence data from depression and basin marsh sites in Florida (X denotes a species observed but not captured by drift fences).

Species	Depression/ basin marsh[a]	Depression/ basin marsh[b]	Depression marsh[c]	Basin marsh[d]	Basin marsh[e]	Depression marsh[f]	Basin marsh[g]
Salamanders							
Two-toed amphiuma	11	1	4	1	1	2	0
One-toed amphiuma	2	0	0	0	0	0	0
Peninsula newt	11	2	49	0	0	0	2
Northern/southern dwarf siren	9	0	16	0	5	0	0
Eastern lesser siren	2	0	0	0	0	0	0
Greater siren	0	0	0	0	8	0	6
Anurans							
Southern cricket frog	5	3	6	1	4	35	0
Oak toad	0	2	0	3	0	0	0
Southern toad	2	1	0	0	0	1	0
Greenhouse frog	0	0	1	1	2	3	0
Eastern narrowmouth toad	5	38	1	4	1	0	116
Green treefrog	7	0	X	2	0	0	9
Pinewoods treefrog	5	0	0	X	0	17	0
Barking treefrog	6	1	0	0	1	51	0
Squirrel treefrog	29	9	0	20	0	0	0
Little grass frog	6	0	4	4	0	0	0
Ornate chorus frog	X	0	0	0	0	0	0
Gopher frog	0	0	0	0	0	14	0
Bullfrog	1	0	0	0	1	0	0
Pig frog	0	0	6	0	1	0	5
Florida leopard frog	78	80	48	98	90	60	79
Eastern spadefoot	0	0	X	0	6	0	0
Unidentified anuran	10	1	0	0	0	12	0
No. amphibians	189	138	135	134	120	195	217
No. amphibian species	15	9	9	9	11	8	6
No. amphibians/array-day	0.412	0.316	0.185	0.184	0.222	0.325	0.323
No. amphibians/km-night	18.06	13.88	12.33	12.24	14.81	11.08	21.53
Turtles							
Chicken turtle	0	0	0	0	0	1	2
Striped mud turtle	10	2	0	8	1	0	0
Eastern mud turtle	21	3	3	7	4	71	2
Cooter	0	0	0	0	X	0	0
Loggerhead musk turtle	0	0	0	0	1	0	0
Crocodilians							
American alligator	0	0	0	0	0	1	0
Lizards							
Green anole	X	2	1	0	X	1	0
Six-lined racerunner	0	0	0	0	3	1	0
Five-lined skink	1	0	0	0	0	0	0
Southeastern five-lined skink	1	0	0	3	0	3	0
Broadhead skink	2	0	0	0	0	0	0
Eastern glass lizard	1	1	1	2	1	1	0
Ground skink	1	0	2	5	0	12	0
Snakes							
Cottonmouth	3	2	0	2	0	0	0
Scarlet snake	0	0	0	0	0	2	0
Racer	0	0	2	4	9	7	2
Eastern indigo snake	0	0	0	0	0	1	0
Corn snake	0	0	0	0	0	0	1
Rat snake	1	0	0	0	0	0	0
Eastern mud snake	2	1	3	1	0	0	6
Common kingsnake	1	0	1	1	0	0	0
Eastern coral snake	0	0	0	0	1	1	0
Southern water snake	2	1	6	0	12	6	15
Florida green water snake	0	0	1	0	1	0	4
Rough green snake	0	1	0	0	0	0	0

Appendix P. Continued.

Species	Depression/ basin marsh[a]	Depression/ basin marsh[b]	Depression marsh[c]	Basin marsh[d]	Basin marsh[e]	Depression marsh[f]	Basin marsh[g]
Snakes (continued)							
Striped crayfish snake	1	0	17	0	1	1	1
Glossy crayfish snake	1	0	1	0	0	0	0
Black swamp snake	2	2	13	1	1	6	7
Dusky pigmy rattlesnake	0	0	X	0	0	0	0
Brown snake	0	0	0	1	0	0	0
Florida redbelly snake	0	0	0	1	0	0	0
Eastern ribbon snake	6	2	21	13	3	8	2
Common garter snake	3	0	1	6	11	1	9
Unidentified snake	0	0	0	0	0	1	0
No. reptiles	59	17	73	55	49	125	51
No. reptile species	17	10	14	14	13	17	11
No reptiles/array-day	0.129	0.039	0.110	0.075	0.091	0.208	0.076
No. reptiles/km-day	5.64	1.71	6.67	5.02	6.05	7.10	5.06
No. amphibians and reptiles	248	155	208	189	169	320	268
No animals/array-day	0.540	0.356	0.285	0.259	0.313	0.533	0.399
No. animals/km-day	23.70	15.59	19.00	17.26	20.86	18.18	26.59
No. days	153	218	365	365	135	200	168
No. array-days	459	436	730	730	540	600	672
Total fence length (m)	68.4	45.6	30.0	30.0	60.0	88.0	60.0

[a] Three 3-fence arrays of silt fencing, with 12 funnel traps each, trapping in depression/basin marshes in mesic flatwoods in Spring Creek Unit of Big Bend WMA, Taylor Co., 5/29/92–10/29/92 (Enge and Wood 1998)

[b] Two 3-fence arrays of silt fencing, with 12 funnel traps each, trapping in depression/basin marshes in mesic flatwoods in Tide Swamp Unit of Big Bend WMA, Taylor Co., 3/25/93–10/29/93 (Enge and Wood 1998)

[c] Two 15-m-long silt fences, with 12 funnel traps each, trapping in depression marshes in scrubby flatwoods W of Crystal River, Citrus Co., 12/13/90–12/13/91 (Joiner and Godwin 1992*a*)

[d] Two 15-m-long silt fences, with 12 funnel traps each, trapping in basin marshes in flatwoods W of Crystal River, Citrus Co., 12/13/90–12/13/91 (Joiner and Godwin 1992*a*)

[e] Four 15-m-long silt fences, with 12 funnel traps each, trapping in basin marshes in pine flatwoods/upland mixed forest E of Lake Panasoffkee, Sumter Co., 8/1/91–12/13/91 (Joiner and Godwin 1992*b*)

[f] Three 3-fence arrays of silt fencing, with 12 funnel traps each, trapping in depression marshes in sandhills and flatwoods in Chassahowitzka WMA, Hernando Co., on alternating months, 7/06/95–6/20/96 (K. Wood, unpubl. data)

[g] Four 15-m-long silt fences, with 12 funnel traps each, trapping in a basin marsh SE of Lake Thonotosassa, Hillsborough Co., 1/11/91–12/16/91, but closed during high-water conditions (Joiner and Godwin 1992*d*)

Appendix Q. Herpetofaunal drift-fence data from freshwater marshes, wet and marl prairies, and tidal marshes and swamps in Florida (X denotes a species observed but not captured by drift fences).

Species	High marsh[a]	Torpedo grass[b]	Pickerel weed[c]	Cattail marsh[d]	Wet prairie[e]	Wet prairie[f]	Marl prairie[g]	Tree island[h]	Tidal marsh[i]	Tidal marsh[j]	Tidal swamp[k]
Salamanders											
Two-toed amphiuma	0	0	3	1	4	0	9	7	0	0	0
Dwarf salamander	5	2	0	0	0	0	0	5	0	0	0
Peninsula newt	0	23	28	2	0	0	0	0	0	0	0
Dwarf siren	1	3	0	0	9	0	0	0	0	0	0
Eastern lesser siren	1	0	5	7	1	1	0	0	0	0	0
Greater siren	1	7	10	7	0	0	0	3	0	0	0
Unidentified siren	0	0	0	0	0	2	0	0	0	0	0
Anurans											
Southern cricket frog	233	3	9	0	77	26	1	0	0	0	0
Oak toad	0	0	0	0	21	9	95	0	0	0	0
Southern toad	1	0	0	0	24	3	45	0	0	0	3
Greenhouse frog	1	0	0	0	8	0	15	0	0	0	0
Eastern narrowmouth toad	2	5	0	0	23	6	10	1	0	1	5
Green treefrog	0	4	1	2	0	0	20	0	0	0	1
Pinewoods treefrog	0	0	0	0	25	1	0	0	0	0	0
Barking treefrog	0	0	0	0	5	0	0	0	0	0	0
Squirrel treefrog	5	0	3	0	5	0	32	0	0	4	0
Cuban treefrog	0	0	0	0	0	0	2	0	0	0	5
Southern chorus frog	0	0	0	0	0	1	5	0	0	0	0
Little grass frog	11	0	1	0	12	2	0	0	0	0	0
Gopher frog	0	0	0	0	72	0	0	0	0	0	0
Bullfrog	0	0	0	2	3	0	0	0	0	0	0
Pig frog	24	7	16	6	9	10	5	4	0	0	0
Florida leopard frog	65	55	12	0	576	62	135	2	0	9	133
Unidentified anuran	0	0	1	0	23	1	0	0	0	0	2
No. amphibians	350	109	89	27	897	124	374	22	0	14	149
No. amphibian species	12	9	10	7	16	10	12	6	0	3	5
No. amphibians/array-day	0.612	0.191	0.156	0.047	1.495	0.633	0.146	0.190	0	0.019	0.084
No. amphibians/km-night	40.79	12.70	10.37	3.15	50.97	27.75	2.44	6.43	0	1.28	7.04
Turtles											
Snapping turtle	1	1	0	1	0	0	0	0	0	0	0
Chicken turtle	0	0	0	0	2	0	0	0	0	0	0
Gopher tortoise	0	0	0	0	0	0	0	0	0	0	1
Striped mud turtle	1	1	3	1	2	0	12	2	0	4	7
Eastern mud turtle	0	0	0	0	36	3	0	0	0	1	0
Common musk turtle	0	0	0	5	0	0	0	0	0	0	0
Eastern box turtle	0	0	0	0	0	0	11	0	0	1	1
Lizards											
Green anole	0	0	0	X	2	0	170	0	0	3	0
Brown anole	0	0	0	0	0	0	0	0	0	0	95
Six-lined racerunner	0	0	0	0	1	0	0	0	0	0	0
Southeastern five-lined skink	1	0	0	0	1	0	23	9	0	4	4
Eastern slender glass lizard	0	0	0	0	1	0	0	0	0	0	0
Island glass lizard	0	0	0	0	0	0	1	0	0	1	0
Eastern glass lizard	0	0	0	0	1	0	0	0	0	0	0
Florida scrub lizard	0	0	0	0	0	0	0	0	0	0	1
Ground skink	0	0	0	0	19	6	30	3	0	6	0

Appendix Q. Continued.

Species	High marsh[a]	Torpedo grass[b]	Pickerel weed[c]	Cattail marsh[d]	Wet prairie[e]	Wet prairie[f]	Marl prairie[g]	Tree island[h]	Tidal marsh[i]	Tidal marsh[j]	Tidal swamp[k]
Snakes											
Cottonmouth	0	1	0	0	0	0	1	2	0	1	0
Scarlet snake	0	0	0	0	2	0	2	0	0	0	0
Racer	0	0	1	0	31	4	8	0	0	1	11
Ringneck snake	0	0	1	0	0	0	3	1	0	0	3
Eastern indigo snake	0	0	0	0	0	0	1	0	0	0	0
Rat snake	1	0	1	0	0	0	0	0	0	0	3
Eastern mud snake	0	0	0	0	1	3	0	4	0	0	0
Common kingsnake	0	0	0	0	0	0	0	1	0	0	0
Scarlet kingsnake	0	0	0	0	0	0	1	0	0	0	1
Eastern coachwhip	0	0	0	0	1	1	0	0	0	0	0
Salt marsh snake	0	0	0	0	0	0	0	0	3	12	1
Southern water snake	1	6	27	20	5	1	3	1	0	1	0
Florida green water snake	0	0	0	2	1	2	0	0	0	0	0
Brown water snake	0	0	2	0	0	0	0	0	0	0	0
Striped crayfish snake	0	1	0	0	0	1	1	5	0	0	0
Black swamp snake	0	1	0	0	2	1	0	0	0	1	0
Dusky pigmy rattlesnake	0	1	0	0	1	1	14	0	0	1	0
Brown snake	0	0	0	0	0	0	2	0	0	0	0
Eastern ribbon snake	7	2	6	0	13	7	8	4	0	6	1
Common garter snake	0	0	0	0	3	1	30	2	0	0	0
Unidentified snake	0	0	0	0	2	0	0	1	0	0	0
No. reptiles	12	14	41	29	127	31	321	35	3	43	129
No. reptile species	6	8	7	5	19	12	18	11	1	14	12
No. reptiles/array-day	0.021	0.024	0.072	0.051	0.212	0.158	0.126	0.302	0.007	0.059	0.073
No. reptiles/km-day	1.40	1.63	4.78	3.38	7.22	6.94	2.09	10.23	0.30	3.92	6.09
No. amphibians and reptiles	362	123	130	56	1,024	155	695	57	3	57	278
No. animals/array-day	0.633	0.215	0.227	0.098	1.707	0.791	0.272	0.491	0.007	0.078	0.158
No. animals/km-day	42.19	14.34	15.15	6.53	58.18	34.68	4.53	16.66	0.30	5.19	13.13
No. days	286	286	286	286	200	98	851.7	58	436	183	882
No. array-days	572	572	572	572	600	196	2,555	116	158	732	1,764
Total fence length (m)	30.0	30.0	30.0	30.0	88.0	45.6	180.0	59.0	45.6	60.0	24.0

[a] Two 15-m-long silt fences, with 6 funnel traps each, trapping in high marsh (emergent grassy vegetation) along the shore of Lake Istokpoga, Highlands Co., 7/15/91–4/27/92 (D. Moxley et al., unpubl. data)

[b] Two 15-m-long silt fences, with 6 funnel traps each, trapping in torpedograss (*Panicum repens*) along the shore of Lake Istokpoga, Highlands Co., 7/15/91–4/27/92 (D. Moxley et al., unpubl. data)

[c] Two 15-m-long silt fences, with 6 funnel traps each, trapping in dense pickerelweed (*Pontederia* sp.) along the shore of Lake Istokpoga, Highlands Co., 7/15/91–4/27/92 (D. Moxley et al., unpubl. data)

[d] Two 15-m-long silt fences, with 6 funnel traps each, trapping in dense cattails (*Typha* sp.) along the shore of Lake Istokpoga, Highlands Co., 7/15/91–4/27/92 (D. Moxley et al., unpubl. data)

[e] Three 3-fence arrays of silt fencing, with 12 funnel traps each, trapping in wet prairies in Chassahowitzka WMA, Hernando Co., on alternating months, 7/06/95–6/20/96 (K. Wood, unpubl. data)

[f] Two 3-fence arrays, with 9 funnel traps each, trapping in wet prairies in Jonathan Dickinson State Park, Martin Co., 7/91–9/93 (Timmerman et al. 1994)

[g] Three 4-fence arrays (with connected 15-m-long shade cloth arms), with 4 large funnel traps (1/8-inch hardware cloth) each, trapping in marl prairie in Everglades National Park, Dade Co., 5/84–12/86 (Dalrymple 1988)

[h] Two 3-fence arrays of silt fencing, with 12 funnel traps each, trapping in tree islands in swale habitat in Rotenberger WMA, Palm Beach Co., 06/07/93–08/04/93 (D. Towles, unpubl. data)

[i] Two 3-fence arrays of silt fencing with 12 funnel traps each trapping in tidal marsh in Tide Swamp Unit of Big Bend WMA, Taylor Co., from 3/25/93–10/29/93 (Enge and Wood 1998)

[j] Four 15-m-long silt fences, with 6 funnel traps each, trapping in tidal marsh adjacent to maritime hammocks W of Crystal River, Citrus Co., 12/13/90–7/15/91 (Joiner and Godwin 1992*a*)

[k] One 15-m-long and 1 9-m-long metal-valley fence, with 2 funnel traps and 4 pitfall traps each, trapping on a spoil bank adjacent to a tidal swamp in Collier-Seminole State Park, Collier Co., 5/93–9/30/95 (Hingtgen 1993, 1994*a*, 1995*a*)

Appendix R. Herpetofaunal drift-fence data from coastal habitats in peninsular Florida (X denotes a species observed but not captured by drift fences).

Species	Maritime hammock[a]	Maritime hammock[b]	Shell mound[c]	Shell mound[d]	Interdunal swale[e]	Interdunal swale[f]	Behind dune[g]
Salamanders							
Mole salamander	17	0	7	0	0	4	0
Dwarf salamander	1	0	81	0	4	0	0
Striped newt	0	0	0	0	0	1	0
Eastern newt	110	0	112	0	0	0	0
Southeastern slimy salamander	0	1	2	7	1	0	0
Anurans							
Southern cricket frog	2	0	0	0	0	0	0
Oak toad	0	0	0	0	0	14	0
Southern toad	0	0	0	0	0	38	0
Greenhouse frog	0	1	0	10	0	0	3
Eastern narrowmouth toad	173	1	61	2	73	64	0
Green treefrog	3	2	0	X	1	3	0
Pinewoods treefrog	0	0	0	0	0	6	0
Squirrel treefrog	0	1	0	X	0	0	0
Southern chorus frog	0	0	1	0	0	0	0
Little grass frog	0	0	0	0	0	5	0
Florida leopard frog	14	4	4	0	1	212	1
Eastern spadefoot	48	4	35	57	15	7	0
Unidentified anuran	0	0	0	0	1	0	8
Unidentified hylid	0	0	0	0	0	0	8
No. amphibians	368	14	303	76	96	354	20
No. amphibian species	8	7	8	4	6	10	3
No. amphibians/array-day	n/a	0.117	n/a	0.633	n/a	2.034	0.027
No. amphibians/km-day	n/a	5.12	n/a	27.28	n/a	96.88	1.25
Turtles							
Gopher tortoise	0	0	0	0	1	0	0
Striped mud turtle	1	0	0	0	0	0	0
Eastern box turtle	0	0	1	0	0	0	0
Lizards							
Green anole	9	5	3	8	3	1	0
Brown anole	0	0	0	0	0	0	64
Six-lined racerunner	6	X	X	2	1	1	3
Five-lined skink	2	2	12	1	2	0	0
Southeastern five-lined skink	4	8	2	4	1	0	12
Broadhead skink	21	34	40	15	5	3	0
Eastern slender glass lizard	0	0	0	0	1	0	0
Eastern glass lizard	3	1	1	6	1	X	0
Ground skink	X	0	4	2	2	6	0
Unidentified lizard	1	0	0	0	0	0	0
Snakes							
Scarlet snake	3	1	1	1	0	1	0
Racer	1	4	X	7	0	0	18
Ringneck snake	0	0	0	0	0	0	1
Corn snake	1	0	0	0	1	0	2
Rat snake	0	0	0	1	0	X	4
Eastern mud snake	2	0	0	0	0	0	0
Scarlet kingsnake	0	0	0	0	0	X	0
Eastern coachwhip	0	0	0	0	0	0	4
Southern water snake	0	0	0	0	0	X	0
Rough green snake	1	0	0	0	0	0	0
Eastern ribbon snake	1	0	0	0	1	X	0
Common garter snake	1	0	1	3	0	X	0
No. reptiles	57	55	65	50	19	12	108
No. reptile species	14	7	9	11	11	5	8
No. reptiles/array-day	n/a	0.458	n/a	0.417	n/a	0.069	0.010
No. reptiles/km-day	n/a	20.10	n/a	18.27	n/a	3.28	6.73

Appendix R. Continued.

Species	Maritime hammock[a]	Maritime hammock[b]	Shell mound[c]	Shell mound[d]	Interdunal swale[e]	Interdunal swale[f]	Behind dune[g]
No. amphibians and reptiles	425	69	368	126	115	366	128
No. animals/array-day	n/a	0.575	n/a	1.050	n/a	2.103	0.176
No. animals/km-day	n/a	25.22	n/a	46.05	n/a	100.16	7.98
No. days	n/a	60	n/a	60	n/a	58	729
No. array-days	n/a	120	n/a	120	n/a	174	729
Total fence length (m)	45.6	45.6	45.6	45.6	45.6	63.0	22.0

[a] Two 3-fence arrays, with 6 funnel traps and 4 pitfall traps each, trapping in maritime hammock on Big Talbot Island, Duval Co. (M. Wingate et al., unpubl. data)

[b] Two 3-fence arrays, with 6 funnel traps and 4 pitfall traps each, trapping 5 days per month in maritime hammock on Fort George Island, Duval Co., 7/19/92–6/18/93 (C. Moore et al., unpubl. data)

[c] Two 3-fence arrays, with 6 funnel traps and 4 pitfall traps each, trapping in shell mound on Big Talbot Island Island, Duval Co. (M. Wingate et al., unpubl. data)

[d] Two 3-fence arrays, with 6 funnel traps and 4 pitfall traps each, trapping 5 days per month in shell mound habitat on Fort George Island, Duval Co., 7/19/92–6/18/93 (C. Moore et al., unpubl. data)

[e] Two 3-fence arrays, with 6 funnel traps and 4 pitfall traps each, trapping in interdunal swales on Big Talbot Island, Duval Co. (M. Wingate et al., unpubl. data)

[f] Three 3-fence arrays (7-m arms), with pitfall traps, trapping in freshwater marshes undergoing restoration in interdunal swales in maritime hammock at Guana River State Park, St. Johns Co., 4/19/94–6/16/94 (B. Charest, unpubl. data)

[g] One 2-fence array (7- and 15-m arms), with 4 funnel traps and 6 pitfall traps, trapping behind a beach dune at Delnor-Wiggins Pass SRA, Collier Co., 10/93–9/95 (Hingtgen 1994*b*, 1995*b*)

Appendix S. Form for recording drift-fence capture data.

STUDY AREA _____ **OBSERVER(S)** _____ **DATE** _____ **MAX/MIN TEMP.** _____ **PRECIP.** _____

ARRAY	TRAP NO.	SPECIES	AGE	SEX	LENGTH (mm)	MASS (g)	I.D. NO.	RECAPTURE?	STATUS	NOTES

Appendix T. Four-letter codes and common and scientific names of species of amphibians, reptiles, and mammals susceptible to capture by drift fences in Florida. Amphibian and reptile names in accordance with Collins (1997), and mammal names in accordance with Brown (1997).

Code	Common and scientific names
Amphibians and Reptiles	
ACAR	Green anole (*Anolis carolinensis*)
ACIN	Flatwoods salamander (*Ambystoma cingulatum*)
ACON	Southern copperhead (*Agkistrodon contortrix*)
ACRE	Northern cricket frog (*Acris crepitans*)
ADIS	Bark anole (*Anolis distichus*)
AFER	Florida softshell (*Apalone ferox*)
AGRY	Southern cricket frog (*Acris gryllus*)
AMEA	Two-toed amphiuma (*Amphiuma means*)
AMIS	American alligator (*Alligator mississippiensis*)
AOPA	Marbled salamander (*Ambystoma opacum*)
APHO	One-toed amphiuma (*Amphiuma pholeter*)
APIS	Cottonmouth (*Agkistrodon piscivorus*)
ASAG	Brown anole (*Anolis sagrei*)
ATAL	Mole salamander (*Ambystoma talpoideum*)
ATIG	Eastern tiger salamander (*A. tigrinum*)
BFOW	Fowler's toad (*Bufo fowleri*)
BMAR	Cane toad (*B. marinus*)
BQUE	Oak toad (*B. quercicus*)
BTER	Southern toad (*B. terrestris*)
CADA	Eastern diamondback rattlesnake (*Crotalus adamanteus*)
CCOC	Scarlet snake (*Cemophora coccinea*)
CCON	Racer (*Coluber constrictor*)
CGUT	Spotted turtle (*Clemmys guttata*)
CHOR	Timber rattlesnake (*Crotalus horridus*)
CSER	Snapping turtle (*Chelydra serpentina*)
CSEX	Six-lined racerunner (*Cnemidophorus sexlineatus*)
DAPA	Apalachicola dusky salamander (*Desmognathus apalachicolae*)
DAUR	Southern dusky salamander (*D. auriculatus*)
DCON	Spotted dusky salamander (*D.conanti*)
DCOU	Eastern indigo snake (*Drymarchon couperi*)
DMON	Seal salamander (*Desmognathus monticola*)
DPUN	Ringneck snake (*Diadophis punctatus*)
DRET	Chicken turtle (*Deirochelys reticularia*)
EANT	Southern coal skink (*Eumeces anthracinus*)
ECIR	Southern two-lined salamander (*Eurycea cirrigera*)
EEGR	Mole Skink (*Eumeces egregius*)
EFAS	Five-lined skink (*E. fasciatus*)
EGUT	Corn snake (*Elaphe guttata*)
EINE	Southeastern five-lined skink (*Eumeces inexpectatus*)
ELAT	Broadhead skink (*E. laticeps*)
ELON	Three-lined salamander (*Eurycea longicauda*)
EQUA	Dwarf salamander (*E. quadridigitata*)
EOBS	Rat snake (*Elaphe obsoleta*)
EPLA	Greenhouse frog (*Eleutherodactylus planirostris*)
FABA	Eastern mud snake (*Farancia abacura*)
FERY	Rainbow snake (*F. erytrogramma*)
GCAR	Eastern narrowmouth toad (*Gastrophryne carolinensis*)
GPOL	Gopher tortoise (*Gopherus polyphemus*)
HAND	Pine Barrens treefrog (*Hyla andersonii*)
HAVI	Bird-voiced treefrog (*H. avivoca*)
HCHR	Cope's gray treefrog (*H. chrysoscelis*)
HCIN	Green treefrog (*H. cinerea*)
HFEM	Pinewoods treefrog (*H. femoralis*)
HGAR	Indo-Pacific gecko (*Hemidactylus garnotii*)
HGRA	Barking treefrog (*Hyla gratiosa*)
HPLA	Eastern hognose snake (*Heterodon platirhinos*)
HSCU	Four-toed salamander (*Hemidactylium scutatum*)
HSIM	Southern hognose snake (*Heterodon simus*)
HSQU	Squirrel treefrog (*Hyla squirella*)
HTUR	Mediterranean gecko (*Hemidactylus turcicus*)
KBAU	Striped mud turtle (*Kinosternon baurii*)
KSUB	Eastern mud turtle (*K. subrubrum*)
LCAL	Mole kingsnake (*Lampropeltis calligaster*)
LGET	Common kingsnake (*L. getula*)
LTRI	Scarlet kingsnake (*L. triangulum*)
MFLA	Eastern coachwhip (*Masticophis flagellum*)
Amphibians and Reptiles (continued)	
MFUL	Eastern coral snake (*Micrurus fulvius*)
MTER	Diamondback terrapin (*Malaclemys terrapin*)
NBEY	Gulf Coast waterdog (*Necturus* sp. cf. *beyeri*)
NCLA	Salt marsh snake (*Nerodia clarkii*)
NCYC	Mississippi green water snake (*N. cyclopion*)
NERY	Plainbelly water snake snake (*N. erythrogaster*)
NFAS	Southern water snake (*N. fasciata*)
NFLO	Florida green water (*N. floridana*)
NPER	Striped newt (*Notophthalmus perstriatus*)
NREY	Sand skink (*Neoseps reynoldsi*)
NSIP	Midland water snake (*Nerodia sipedon*)
NTAX	Brown water snake (*N. taxispilota*)
NVIR	Eastern newt (*Notophthalmus viridescens*)
OAES	Rough green snake (*Opheodrys aestivus*)
OATT	Eastern slender glass lizard (*Ophisaurus attenuatus*)
OCOM	Island glass lizard (*O. compressus*)
OMIM	Mimic glass lizard (*O. mimicus*)
OSEP	Cuban treefrog (*Osteopilus septentrionalis*)
OVEN	Eastern glass lizard (*Ophisaurus ventralis*)
PAXA	Southern dwarf siren (*Pseudobranchus axanthus*)
PCON	Eastern river cooter (*Pseudemys concinna*)
PCRU	Spring peeper (*Pseudacris crucifer*)
PFER	Upland chorus frog (*Pseudacris feriarum*)
PFLO	Florida cooter (*Pseudemys floridana*)
PGRO	Southeastern slimy salamander (*Plethodon grobmani*)
PMON	Eastern mud salamander (*Pseudotriton montanus*)
PNEL	Florida redbelly turtle (*Pseudemys nelsoni*)
PNIG	Southern chorus frog (*Pseudacris nigrita*)
POCU	Little grass frog (*P. ocularis*)
PORN	Ornate chorus frog (*P. ornata*)
PPEN	Peninsula cooter (*Pseudemys peninsularis*)
PRUB	Southern red salamander (*Pseudotriton ruber*)
PSTR	Northern dwarf siren (*Pseudobranchus striatus*)
PSUW	Suwannee River cooter (*Pseudemys suwanniensis*)
RALL	Striped crayfish snake (*Regina alleni*)
RBRA	Brahminy blind snake (*Ramphotyphlops braminus*)
RCAP	Gopher frog (*Rana capito*)
RCAT	Bullfrog (*R. catesbeiana*)
RCLA	Bronze frog (*R. clamitans*)
RFLA	Pine woods snake (*Rhadinaea flavilata*)
RFLO	Florida worm lizard (*Rhineura floridana*)
RGRY	Pig frog (*Rana grylio*)
RHEC	River frog (*R. heckscheri*)
ROKA	Florida bog frog (*R. okaloosae*)
RRIG	Glossy crayfish snake (*Regina rigida*)
RSEP	Queen snake (*R. septemvittata*)
RSPH	Florida leopard frog (*Rana sphenocephala*)
SDEK	Brown snake (*Storeria dekayi*)
SEXT	Short-tailed snake (*Stilosoma extenuatum*)
SHOL	Eastern spadefoot (*Scaphiopus holbrookii*)
SINT	Eastern lesser siren (*Siren intermedia*)
SLAC	Greater siren (*S. lacertina*)
SLAT	Ground skink (*Scincella lateralis*)
SMAR	Many-lined salamander (*Stereochilus marginatus*)
SMIL	Dusky pigmy rattlesnake (*Sistrurus miliarius*)
SMIN	Loggerhead musk turtle (*Sternotherus minor*)
SNOT	Florida reef gecko (*Sphaerodactylus notatus*)
SOCC	Florida redbelly snake (*Storeria occipitomaculata*)
SODO	Common musk turtle (stinkpot) (*Sternotherus odoratus*)
SPYG	Black swamp snake (*Seminatrix pygaea*)
SUND	Southern fence lizard (*Sceloporus undulatus*)
SWOO	Florida scrub lizard (*S. woodi*)
TCAR	Eastern box turtle (*Terrapene carolina*)
TCOR	Southeastern crowned snake (*Tantilla coronata*)
TOOL	Rim rock crowned snake (*T. oolitica*)
TREL	Florida crowned snake (*T. relicta*)
TSAU	Eastern ribbon snake (*Thamnophis sauritus*)
TSCR	Slider (*Trachemys scripta*)

Appendix T. Continued.

Code	Common and scientific names
Amphibians and Reptiles (continued)	
TSIR	Common garter snake (*Thamnophis sirtalis*)
UAMP	Unidentified amphiuma (*Amphiuma* sp.)
UANU	Unidentified anuran (frog or toad)
UBUF	Unidentified bufonid (toad; *Bufo* or *Scaphiopus*)
UCAU	Unidentified caudate (salamander)
UEUM	Unidentified skink (*Eumeces* sp.)
UHYL	Unidentified hylid (*Acris*, *Hyla*, or *Pseudacris*)
UKIN	Unidentified mud turtle (*Kinosternon* sp.)
ULIZ	Unidentified lizard
URAN	Unidentified ranid (*Rana* sp.)
USIR	Unidentified sirenid (*Siren* or *Pseudobranchus*)
USNA	Unidentified snake
UTUR	Unidentified turtle
VSTR	Rough earth snake (*Virginia striatula*)
VVAL	Eastern earth snake (*V. valeriae*)
Mammals	
BCAR	Southern short-tailed shrew (*Blarina carolinensis*)
CCRI	Star-nosed mole (*Condylura cristata*)
CPAR	Least shrew (*Cryptotis parva*)
DVIR	Virginia opossum (*Didelphis virginiana*)
GPIN	Southeastern pocket gopher (*Geomys pinetis*)
GVOL	Southern flying squirrel (*Glaucomys volans*)
MFRE	Least weasel (*Mustela frenata*)
Mammals (continued)	
MMEP	Striped skunk (*Mephitis mephitis*)
MMUS	House mouse (*Mus musculus*)
MPEN	Meadow vole (*Microtus pennsylvanicus*)
MPIN	Pine vole (*M. pinetorum*)
NALL	Round-tailed muskrat (*Neofiber alleni*)
NFLR[a]	Eastern woodrat (*Neotoma floridana*)
ONUT	Golden mouse (*Ochrotomys nuttalli*)
OPAL	Marsh rice rat (*Oryzomys palustris*)
PGOS	Cotton mouse (*Peromyscus gossypinus*)
PFLO	Florida mouse (*P. floridanus*)
PLOT	Raccoon (*Procyon lotor*)
PPOL	Beach or oldfield mouse (*Peromyscus polionotus*)
RHUM	Eastern harvest mouse (*Reithrodontomys humulis*)
RNOR	Norway rat (*Rattus norvegicus*)
RRAT	Black or roof rat (*R. rattus*)
SAQU	Eastern mole (*Scalopus aquaticus*)
SCAR	Gray squirrel (*Sciurus carolinensis*)
SFLO	Eastern cottontail (*Sylivilagus floridanus*)
SHIS	Hispid cotton rat (*Sigmodon hispidus*)
SLON	Southeastern shrew (*Sorex longirostris*)
SNIG	Fox squirrel (*Sciurus niger*)
SPAL	Marsh rabbit (*Sylvilagus palustris*)
SPUT	Spotted skunk (*Spilogale putorius*)
UMAM	Unidentified mammal
UROD	Unidentified rodent
USHR	Unidentified shrew

[a] The species code is not NFLO because that code is already assigned to the Florida green water snake.

Appendix U. Habitat preferences (primary/secondary) for amphibian and reptile species that have been captured by drift fences in Florida (AQU=aquatic, ARB=arboreal, FOS=fossorial, REF=refugia-dwelling, SAQ=semiaquatic, SAR=semiarboreal, SUR=surfacoreal).

Common name	Habitat
Anurans	
Northern cricket frog	SAQ
Southern cricket frog	SAQ
Oak toad	SUR/REF
Southern toad	REF/SUR
Greenhouse frog	REF
Eastern narrowmouth toad	REF
Bird-voiced treefrog	ARB
Cope's gray treefrog	ARB
Green treefrog	ARB/REF
Pinewoods treefrog	ARB/REF
Barking treefrog	ARB/FOS
Squirrel treefrog	ARB/REF
Cuban treefrog	ARB/REF
Spring peeper	SAR/REF
Southern chorus frog	REF
Little grass frog	SAR/SAQ
Ornate chorus frog	REF/FOS
Gopher frog	FOS/REF
Bullfrog	SAQ
Bronze frog	SAQ/REF
Pig frog	AQU
River frog	AQU
Florida leopard frog	SAQ/SUR
Eastern spadefoot	FOS
Salamanders	
Flatwoods salamander	REF
Marbled salamander	REF
Mole salamander	FOS/REF
Eastern tiger salamander	FOS
Two-toed amphiuma	AQU
One-toed amphiuma	AQU/FOS
Southern dusky salamander	SAQ
Apalachicola dusky salamander	SAQ/REF
Southern two-lined salamander	SAQ/REF
Three-lined salamander	REF/SAQ
Dwarf salamander	REF/SAQ
Four-toed salamander	REF
Striped newt	SAQ
Eastern newt eft	REF
Eastern newt adult	AQU
Southeastern slimy salamander	REF
Southern dwarf siren	AQU
Northern dwarf siren	AQU
Eastern mud salamander	SAQ/FOS
Southern red salamander	SAQ/REF
Eastern lesser siren	AQU
Greater siren	AQU
Turtles	
Florida softshell	AQU
Snapping turtle	AQU
Chicken turtle	SAQ
Gopher tortoise	FOS
Striped mud turtle	SAQ
Eastern mud turtle	SAQ
Florida/southern cooter	AQU
Florida redbelly turtle	AQU
Loggerhead musk turtle	AQU
Common musk turtle	AQU
Eastern box turtle	SUR
Slider	AQU
Crocodilians	
American alligator	AQU
Amphisbaenids	
Florida worm lizard	FOS
Lizards	
Green anole	ARB
Brown anole	SAR
Six-lined racerunner	SUR
Mole skink	REF/FOS
Southern coal skink	SUR/REF
Five-lined skink	SAR/REF
Southeastern five-lined skink	SAR/REF
Broadhead skink	ARB/REF
Sand skink	FOS
Eastern slender glass lizard	SUR/REF
Island glass lizard	SUR/REF
Eastern glass lizard	SUR/REF
Ground skink	REF/SUR
Southern fence lizard	SAR
Florida scrub lizard	SUR
Florida reef gecko	REF
Snakes	
Southern copperhead	SUR
Cottonmouth	SAQ
Scarlet snake	FOS/SUR
Racer	SUR
Eastern diamondback rattlesnake	SUR/REF
Timber rattlesnake	SUR
Ringneck snake	REF
Eastern indigo snake	SUR/REF
Corn snake	SAR
Rat snake	ARB/SUR
Eastern mud snake	AQU/FOS
Eastern hognose snake	SUR
Southern hognose snake	SUR/FOS
Common kingsnake	REF/SUR
Scarlet kingsnake	REF/SAR
Eastern coachwhip	SUR
Eastern coral snake	REF/SUR
Salt marsh snake	AQU
Plainbelly water snake	SAQ/SAR
Banded water snake	SAQ/SAR
Florida green water snake	SAQ
Brown water snake	SAQ/SAR
Rough green snake	ARB
Florida pine snake	FOS/SUR
Striped crayfish snake	AQU
Glossy crayfish snake	AQU
Queen snake	AQU/REF
Pine woods snake	REF
Black swamp snake	AQU
Dusky pigmy rattlesnake	SUR/REF
Short-tailed snake	FOS
Brown snake	SAQ/REF
Florida redbelly snake	REF
Southeastern crowned snake	REF
Florida crowned snake	FOS/REF
Eastern ribbon snake	SAQ/SAR
Common garter snake	SUR/SAQ
Rough earth snake	REF
Eastern earth snake	REF

Appendix V. Form for recording drift-fence habitat data.

HABITAT DATA FOR DRIFT-FENCE ARRAYS

SITE: _____ ARRAY: _____ DATE: _____

Habitat Type: _____

Compass Bearings and Lengths of Fences: _____

_____

Latitude & Longitude (GPS): _____

Distance to Water/Habitat Edge: _____

Overstory:

% Canopy Closure: _____

Dominant Species: _____

_____

Height: _____

Shrub Layer:

% Density and Height of Dominant Species: _____

_____

Ground Cover:

% Coverage of Grasses/Sedges: _____

_____

% Coverage of Forbs: _____

_____

% Coverage of Woody Plants: _____

_____

% & Type of Litter & % Exposed Soil: _____

_____

Presence of Cover:

Fallen Logs: _____

Stumps/Snags: _____

Limerock: _____

Burrows: _____

Hydroperiod:

Season: _____ Water Depth: _____

Comments (fire frequency, disturbances, etc.): _____

_____

_____

_____

_____

_____

_____

_____

_____

_____

_____

_____

Printed on Recycled Paper

This Agency does not allow discrimination by race, color, nationality, sex, or handicap. If you believe you have been discriminated against in any program, activity or facility of this agency, write to:
Florida Game and Fresh Water Fish Commission,
620 S. Meridian St.,
Tallahassee, Fl. 32399-1600, or to
Office for Human Relations,
USFWS, Dept. of Interior,
Washington, D.C. 20240